Installation Instructions for *R9S80*U Ultra Low NOx Gas Furnace CATEGORY I

These furnaces comply with requirements embodied in the American National Standard/National Standard of Canada ANSI Z21.47·CSA-2.3 Gas Fired Central Furnaces.

Installer: Affix all manuals adjacent to the unit.

ATTENTION INSTALLING PERSONNEL

As a professional installer, you have an obligation to know the product better than the customer. This includes all safety precautions and related items.

Prior to actual installation, thoroughly familiarize yourself with this Instruction Manual. Pay special attention to all safety warnings. Often during installation or repair, it is possible to place yourself in a position which is more hazardous than when the unit is in operation.

Remember, it is **your** responsibility to install the product safely and to know it well enough to be able to instruct a customer in its safe use.

Safety is a matter of common sense...a matter of thinking before acting. Most dealers have a list of specific, good safety practices...follow them.

The precautions listed in this Installation Manual are intended as supplemental to existing practices. However, if there is a direct conflict between existing practices and the content of this manual, the precautions listed here take precedence.

RECOGNIZE THIS SYMBOL AS A SAFETY PRECAUTION

NOTE: Please contact your distributor or our website listed below for the applicable Specification Sheet referred to in this manual.

WARNING

Only personnel that have been trained to install, adjust, service, maintenance or repair (hereinafter, "service") the equipment specified in this manual should service the equipment.

This equipment is not intended for use by persons (including children) with reduced physical, sensory or mental capacities, or lack of experience and knowledge, unless they have been given supervision or instruction concerning use of the appliance by a person responsible for their safety.

Children should be supervised to ensure that they do not play with the equipment.

The manufacturer will not be responsible for any injury or property damage arising from improper supervision, service or service procedures. If you service this unit, you assume responsibility for any injury or property damage which may result. In addition, in jurisdictions that require one or more licenses to service the equipment specified in this manual, only licensed personnel should service the equipment. Improper supervision, installation, adjustment, servicing, maintenance or repair of the equipment specified in this manual, or attempting to install, adjust, service or repair the equipment specified in this manual without proper supervision or training may result in product damage, property damage, personal injury or death.

WARNING

Do not bypass safety devices.

WARNING

This furnace may be paired with a cooling unit that uses R-32 refrigerant. If the cooling unit paired with this furnace does not use R-32, the R-32 function in the furnace control board needs to be turned off. Please see the electrical and the R-32 section for more details. Refrigerant systems other than 410A or R-32 may require an additional mitigation control board. Refer to the installation manual of the indoor evaporator coil to determine installation requirements for that supplier's refrigerant detection system.

80% HEX

DO NOT LIFT PRODUCT USING HEAT EXCHANGER

19001 Kermier Rd., Waller, TX 77484
www.goodmanmfg.com • www.amana-hac.com
© 2026 Daikin Comfort Technologies Manufacturing, Inc.

IOG-2039F
10/2026

AMANA HEATING & AIR CONDITIONING ® / TM 2026 Amana. Manufactured under license by Daikin. Limited warranty provided by the manufacturer. All trademarks are the property of their respective owners.

TABLE OF CONTENTS

SAFETY CONSIDERATIONS 2
PRODUCT APPLICATION 5
LOCATION REQUIREMENTS AND CONSIDERATIONS . 6
COMBUSTION AND VENTILATION AIR REQUIREMENTS 10
CATEGORY I VENTING (VERTICAL VENTING) 10
MASONRY CHIMNEYS 11
ELECTRICAL CONNECTIONS 11
GAS SUPPLY AND PIPING 14
CIRCULATING AIR AND FILTERS 17
NORMAL SEQUENCE OF OPERATION 18
COOLING MODE SEQUENCE OF OPERATION 19
HEAT PUMP MODE 19
START-UP PROCEDURE AND ADJUSTMENT 20
R-32 FUNCTION 21
OPERATIONAL CHECKS 27
SAFETY CIRCUIT DESCRIPTION 27
TROUBLESHOOTING 28
MAINTENANCE 28
CLEANING (QUALIFIED SERVICER ONLY) 29
BEFORE LEAVING AN INSTALLATION 29
REPAIR AND REPLACEMENT PARTS 29
COMPONENT ID 30
TROUBLESHOOTING CHART 31
BLOWER PERFORMANCE DATA 34
WIRING DIAGRAM 36
START-UP CHECKLIST 37

SAFETY CONSIDERATIONS

IMPORTANT NOTE: THIS UNIT IS DESIGNED TO MEET THE NOx REQUIREMENT OF 14 ng/J MAXIMUM AS MAY BE REQUIRED IN CERTAIN STATES AND AIR QUALITY MANAGEMENT DISTRICTS.

This unit has a Control System that compensates for certain installation and environmental conditions. This unit must:

- Be properly installed, operated, and maintained per the instructions.
- Be serviced only by properly trained Service Technicians.

This unit is not approved for use with gases other than Natural Gas.

Units that are not installed, maintained, or operated properly may result in “noisy” operation during the Heating Cycle. If this unit is making unusual or objectionable noises during the Heating Cycle, turn the heat off at the thermostat and contact a qualified Service organization right away.

Adhere to the following warnings and cautions when installing, adjusting, altering, servicing, or operating the furnace. To ensure proper installation and operation, thoroughly read this manual for specifics pertaining to the installation and application of this product.

This furnace is manufactured for use with natural gas only.

Install this furnace only in a location and position as specified in **LOCATION REQUIREMENTS & CONSIDERATIONS section and INSTALLATION POSITIONS section** of this manual.

Provide adequate combustion and ventilation air to the furnace as specified in **COMBUSTION & VENTILATION AIR REQUIREMENTS section of this manual.**

Combustion products must be discharged to the outdoors. Connect this furnace to an approved vent system only, as specified in **CATEGORY 1 VENTING** section of this manual.
Never test for gas leaks with an open flame. Use a commercially available soap solution made specifically for the detection of leaks to check all connections, as specified in **GAS SUPPLY AND PIPING** section of this manual.

Always install a furnace to operate within the furnace’s intended temperature-rise range with a duct system which has external static pressure within the allowable range, as specified on the furnace rating plate and **OPERATIONAL CHECKS section** of these instructions.

When a furnace is installed so that supply ducts carry air circulated by the furnace to areas outside the space containing the furnace, the return air shall also be handled by duct(s) sealed to the furnace casing and terminating outside the space containing the furnace.

A gas-fired furnace for installation in a residential garage must be installed as specified in the **LOCATION REQUIREMENTS AND CONSIDERATIONS section** of this manual.

This furnace may be used as a construction site heater only if certain conditions are met. These conditions are listed in the **PRODUCT APPLICATION section** of this manual.

WARNING

To prevent personal injury or death due to improper installation, adjustment, alteration, service or maintenance, refer to this manual. For additional assistance or information, consult a qualified installer, servicer agency or the gas supplier.

WARNING

FIRE OR EXPLOSION HAZARD

Failure to follow the safety warnings exactly could result in serious injury, death or property damage.

Never test for gas leaks with an open flame.
Use a commercially available soap solution made specifically for the detection of leaks to check all connections.
A fire or explosion may result causing property damage, personal injury or loss of life.

WARNING

If the information in these instructions is not followed exactly, a fire or explosion may result causing property damage, personal injury or loss of life.
– Do not store or use gasoline or other flammable vapors and liquids in the vicinity of this or any other appliance.
– WHAT TO DO IF YOU SMELL GAS:
  - Do not try to light any appliance.
  - Do not touch any electrical switch; do not use any phone in your building.
  - Immediately call your gas supplier from a neighbor's phone. Follow the gas supplier's instructions.
  - If you cannot reach your gas supplier, call the fire department.
– Installation and service must be performed by a qualified installer, service agency or the gas supplier.

WARNING

Heating unit should not be utilized without reasonable, routine, inspection, maintenance and supervision. If the building in which any such device is located will be vacant, care should be taken that such device is routinely inspected, maintained, and monitored. In the event that the building maybe exposed to freezing temperatures and will be vacant, all water-bearing pipes should be drained, the building should be properly winterized, and the water source closed. In the event that the building may be exposed to freezing temperatures and will be vacant, any hydronic coil units should be drained as well and, in such case, alternative heat sources should be utilized.

WARNING

Should overheating occur or the gas supply fail to shut off, turn off the manual gas shutoff valve external to the furnace before turning off the electrical supply.

WARNING

Possible property damage, personal injury or death due to fire, explosion, smoke, soot, condensation, electrical shock or carbon monoxide may result from improper installation, repair operation, or maintenance of this product.

WARNING

To prevent personal injury or death due to asphyxiation, this furnace must be Category I vented. Do not vent using Category III venting.
Provisions must be made for venting combustion products outdoors through a proper venting system. The length of flue pipe could be a limiting factor in locating the furnace.

WARNING

CARBON MONOXIDE POISONING HAZARD

FAILURE TO FOLLOW THE STEPS OUTLINED BELOW FOR EACH APPLIANCE CONNECTED TO THE VENTING SYSTEM BEING PLACED INTO OPERATION COULD RESULT IN CARBON MONOXIDE POISONING OR DEATH.

THE FOLLOWING STEPS SHALL BE FOLLOWED WITH EACH APPLIANCE CONNECTED TO THE VENTING SYSTEM PLACED IN OPERATION, WHILE ANY OTHER APPLIANCES CONNECTED TO THE VENTING SYSTEM ARE NOT IN OPERATION:

1. SEAL ANY UNUSED OPENINGS IN THE VENTING SYSTEM.
2. INSPECT THE VENTING SYSTEM FOR PROPER SIZE AND HORIZONTAL PITCH, AS REQUIRED BY THE NATIONAL FUEL GAS CODE, ANSI Z223.1 OR THE NATURAL GAS AND PROPANE INSTALLATION CODE, CSA B149.1-15 AND THESE INSTRUCTIONS. DETERMINE THAT THERE IS NO BLOCKAGE OR RESTRICTION, LEAKAGE, CORROSION AND OTHER DEFICIENCIES WHICH COULD CAUSE AN UNSAFE CONDITION.
3. AS FAR AS PRACTICAL, CLOSE ALL BUILDING DOORS AND WINDOWS AND ALL DOORS BETWEEN THE SPACE IN WHICH THE APPLIANCE(S) CONNECTED TO THE VENTING SYSTEM ARE LOCATED AND OTHER SPACES OF THE BUILDING.
4. CLOSE FIREPLACE DAMPERS.
5. TURN ON CLOTHES DRYERS AND ANY APPLIANCE NOT CONNECTED TO THE VENTING SYSTEM. TURN ON ANY EXHAUST FANS, SUCH AS RANGE HOODS AND BATHROOM EXHAUSTS, SO THEY SHALL OPERATE AT MAXIMUM SPEED.
   DO NOT OPERATE A SUMMER EXHAUST FAN.
6. FOLLOW THE LIGHTING INSTRUCTIONS. PLACE THE APPLIANCE BEING INSPECTED IN OPERATION. ADJUST THERMOSTAT SO APPLIANCE SHALL OPERATE CONTINUOUSLY.
7. TEST FOR SPILLAGE FROM DRAFT HOOD APPLIANCES AT THE DRAFT HOOD RELIEF OPENING AFTER 5 MINUTES OF MAIN BURNER OPERATION. USE THE FLAME OF A MATCH OR CANDLE.
8. IF IMPROPER VENTING IS OBSERVED DURING ANY OF THE ABOVE TESTS, THE VENTING SYSTEM MUST BE CORRECTED IN ACCORDANCE WITH THE NATIONAL FUEL GAS CODE ANSI Z223.1/ NFPA 54 AND/OR NATIONAL GAS AND PROPANE INSTALLATION CODE CSA B149.1-15.
9. AFTER IT HAS BEEN DETERMINED THAT EACH APPLIANCE CONNECTED TO THE VENTING SYSTEM PROPERLY VENTS WHEN TESTED AS OUTLINED ABOVE, RETURN DOORS, WINDOWS, EXHAUST FANS, FIREPLACE DAMPERS AND ANY OTHER GAS BURNING APPLIANCE TO THEIR PREVIOUS CONDITIONS OF USE.

DANGER

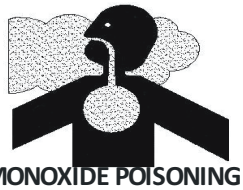

CARBON MONOXIDE POISONING HAZARD

Special Warning for Installation of Furnace or Air Handling Units in Enclosed Areas such as Garages, Utility Rooms or Parking Areas

Carbon monoxide producing devices (such as an automobile, space heater, gas water heater, etc.) should not be operated in enclosed areas such as unventilated garages, utility rooms or parking areas because of the danger of carbon monoxide (CO) poisoning resulting from the exhaust emissions. If a furnace or air handler is installed in an enclosed area such as a garage, utility room or parking area and a carbon monoxide producing device is operated therein, there must be adequate, direct outside ventilation.

This ventilation is necessary to avoid the danger of CO poisoning which can occur if a carbon monoxide producing device continues to operate in the enclosed area. Carbon monoxide emissions can be (re)circulated throughout the structure if the furnace or air handler is operating in any mode.

CO can cause serious illness including permanent brain damage or death.

B10259-216

DANGER
PELIGRO

RIESGO DE INTOXICACIÓN PORMONÓXIDO DE CARBONO

Advertencia especial para la instalación de calentadores ómanejadoras de aire en áreas cerradas como estacionamientos ó cuartos de servicio.

Los equipos ó aparatos que producen monóxido de carbono (tal como automóvil, calentador de gas, calentador de agua por medio de gas, etc) no deben ser operados en áreas cerradas debido al riesgo de envenenamiento por monóxido de carbono (CO) que resulta de las emisiones de gases de combustión. Si el equipo ó aparato se opera en dichas áreas, debe existir una adecuada ventilación directa al exterior.

Esta ventilación es necesaria para evitar el peligro de envenenamiento por CO, que puede ocurrir si unlispositivo que produce monóxido de carbono sigue operando en el lugar cerrado.

Las emisiones de monóxido de carbono pueden circular a través del aparato cuando se opera en cualquier modo.

El monóxido de carbono puede causar enfermedades severas como daño cerebral permanente ó muerte.

B10259-216

Additional Safety Considerations

- This furnace is approved for Category I Venting only.
- Provisions must be made for venting combustion products outdoors through a proper venting system. The length of flue pipe could be a limiting factor in locating the furnace.

Shipping Inspection

All units are securely packed in shipping containers tested according to International Safe Transit Association specifications. The carton must be checked upon arrival for external damage. If damage is found, a request for inspection by the carrier's agent must be made in writing immediately.

The furnace must be carefully inspected on arrival for damage and bolts or screws which may have come loose in transit. In the event of damage the consignee should:

1. Make a notation on delivery receipt of any visible damage to shipment or container.
2. Notify the carrier promptly and request an inspection.
3. With concealed damage, the carrier must be notified as soon as possible - preferably within five days.
4. File the claim with the following support documents within a nine month statute of limitations.
   - Original or certified copy of the Bill of Lading, or indemnity bond.
   - Original paid freight bill or indemnity in lieu thereof.
   - Original or certified copy of the invoice, showing trade and other discounts or reductions.
   - Copy of the inspection report issued by the carrier's representative at the time damage is reported to carrier.

The carrier is responsible for making prompt inspection of damage and for a thorough investigation of each claim. The distributor or manufacturer will not accept claims from dealers for transportation damage.

Keep this literature in a safe place for future reference.

Electrostatic Discharge (ESD) Precautions

NOTE: Discharge your body's static electricity before touching unit. An electrostatic discharge can adversely affect electrical components.

Use the following precautions during furnace installation and servicing to protect the integrated control module from damage. By putting the furnace, the control, and the person at the same electrostatic potential, these steps will help avoid exposing the integrated control module to electrostatic discharge. This procedure is applicable to both installed and non-installed (ungrounded) furnaces.

1. Disconnect all power to the furnace. Do not touch the integrated control module or any wire connected to the control prior to discharging your body's electrostatic charge to ground.
2. Firmly touch a clean, unpainted, metal surface of the furnace near the control. Any tools held in a person's hand during grounding will be discharged.
3. Service integrated control module or connecting wiring following the discharge process in step 2. Use caution not to recharge your body with static electricity; (i.e., do not move or shuffle your feet, do not touch ungrounded objects, etc.). If you come in contact with an ungrounded object, repeat step 2 before touching control or wires.
4. Discharge your body to ground before removing a new control from its container. Follow steps 1 through 3 if installing the control on a furnace. Return any old or new controls to their containers before touching any ungrounded object.

To The Installer

Before installing this unit, please read this manual thoroughly to familiarize yourself with specific items which must be adhered to, including but not limited to: unit maximum external static pressure, gas pressures, BTU input rating, proper electrical connections, circulating air temperature rise, minimum or maximum CFM, and motor speed connections, and venting. These furnaces are designed for Category I venting only.

WARNING

To prevent property damage, personal injury or death due to fire, do not install this furnace in a mobile home, trailer, or recreational vehicle.

NOTE: This unit should be installed in a manner so that it is not accessible to the public.

PRODUCT APPLICATION

This furnace is primarily designed for residential home-heating applications. It is not designed or certified for use in mobile homes, trailers or recreational vehicles. Neither is it designed or certified for outdoor applications. The furnace must be installed indoors (i.e., attic space, crawl space, or garage area provided the garage area is enclosed with an operating door).

This furnace can be used in the following non-industrial commercial applications:

Schools, Office buildings, Churches, Retail stores, Nursing homes, Hotels/motels, Common or office areas

In such applications, the furnace must be installed with the following stipulations:

- It must be installed per the installation instructions provided and per local and national codes.
- It must be installed indoors in a building constructed on site.

- It must be part of a ducted system and not used in a free air delivery application.
- It must not be used as a “make-up” air unit.
- All other warranty exclusions and restrictions apply.

This furnace may be used as a construction site heater **ONLY** if the following conditions are met:

- The vent system is permanently installed per these installation instructions.
- A room thermostat is used to control the furnace. Fixed jumpers that provide continuous heating CANNOT be used and can cause long term equipment damage. Bi-metal thermostats, or any thermostat affected by vibration must not be used during construction.
- Return air ducts are provided and sealed to the furnace.
- A return air temperature range between 60°F (16°C) and 80°F (27°C) is maintained.
- Air filters are installed in the system and replaced daily during construction and upon completion of construction.
- The input rate and temperature rise are set per the furnace rating plate.
- 100% outside air must be used for combustion during construction. Temporary ducting may be used to supply outside air to the furnace for combustion – do not connect this duct directly to the furnace. Size this duct according to NFPA 54/ANSI Z223.1 section for Combustion and Ventilation Air.
- The furnace heat exchanger, components, duct system, air filters and evaporator coils are thoroughly cleaned following final construction clean up by a qualified person.
- All furnace operating conditions (including ignition, input rate, temperature rise and venting) are verified by a qualified person according to these installation instructions.
- Furnace doors must be in place on the furnace while the furnace is operating in any mode.

Damage or repairs due to failure to comply with these requirements are not covered under the warranty.
To ensure proper furnace operation, install, operate and maintain the furnace in accordance with these installation and operation instructions, all local building codes and ordinances. In their absence, follow the latest edition of the National Fuel Gas Code (NFPA 54/ANSI Z223.1), local plumbing or waste water codes, and other applicable codes.

A copy of the National Fuel Gas Code (NFPA 54/ANSI Z223.1) can be obtained from any of the following:

American National Standards Institute
25 West 43rd Street, 4th Floor
New York, NY 10036

National Fire Protection Association
1 Batterymarch Park
Quincy, MA 02169-7471

CSA International
8501 East Pleasant Valley
Cleveland, OH 44131

Additional helpful publications available from the NFPA are, NFPA 90A - Installation of Air Conditioning and Ventilating System and NFPA 90B - Warm Air Heating and Air Conditioning System.

The rated heating capacity of the furnace should be greater than or equal to the total heat loss of the area to be heated. The total heat loss should be calculated by an approved method or in accordance with “ASHRAE Guide” or “Manual J-Load Calculations” published by the Air Conditioning Contractors of America.

LOCATION REQUIREMENTS AND CONSIDERATIONS

WARNING

TO PREVENT POSSIBLE EQUIPMENT DAMAGE, PROPERTY DAMAGE, PERSONAL INJURY OR DEATH, THE FOLLOWING BULLET POINTS MUST BE OBSERVED WHEN INSTALLING THIS UNIT.

Follow the instructions listed below when selecting a furnace location. Refer also to the guidelines provided in *Combustion and Ventilation Air Requirements.*

- Centrally locate the furnace with respect to the proposed or existing air distribution system.
- Ensure the temperature of the return air entering the furnace is between 60°F and 80°F when the furnace is heating.
- Provisions must be made for venting combustion products outdoors through a proper venting system. The length of flue pipe could be a limiting factor in locating the furnace.
- Ensure adequate combustion air is available for the furnace. Improper or insufficient combustion air can expose building occupants to gas combustion products that could include carbon monoxide. Refer to *Combustion and Ventilation Air Requirements.*
- The furnace must be level. If the furnace is to be set on a floor that may become wet or damp at times, the furnace should be supported above the floor on a concrete base sized approximately 1-½” larger than the base of the furnace.
- Ensure upflow or horizontal furnaces are not installed directly on carpeting, or any other combustible material. The only combustible material allowed is wood.

- Exposure to contaminated combustion air will result in safety and performance-related problems. Do not install the furnace where the combustion air is exposed to the following substances:
  - permanent wave solutions
  - chlorinated waxes or cleaners
  - chlorine-based swimming pool chemicals
  - carbon tetrachloride
  - water softening chemicals
  - swimming pool chemicals
  - deicing salts or chemicals
  - halogen type refrigerants
  - printing inks
  - cleaning solutions (such as perchloroethylene)
  - paint removers
  - varnishes
  - hydrochloric acid
  - cements and glues
  - antistatic fabric softeners for clothes dryers
  - masonry acid washing materials
- If the furnace is used in connection with a cooling unit, install the furnace upstream of the cooling coil. A coil installed above an upflow furnace may be the same width as the furnace or may be one size larger than the furnace.
  EXAMPLE: A “C” width coil may be installed with a “B” width furnace.
  For all applications, the front of the coil and furnace must face the same direction.
- If the furnace is installed in a residential garage, position the furnace so that the burners and ignition source are located not less than 18 inches above the floor. Protect the furnace from physical damage by vehicles.
- If the furnace is installed horizontally, ensure access doors are not on the “up/top” or “down/bottom” side of the furnace.
- Do not connect this furnace to a chimney flue that serves a separate appliance designed to burn solid fuel.

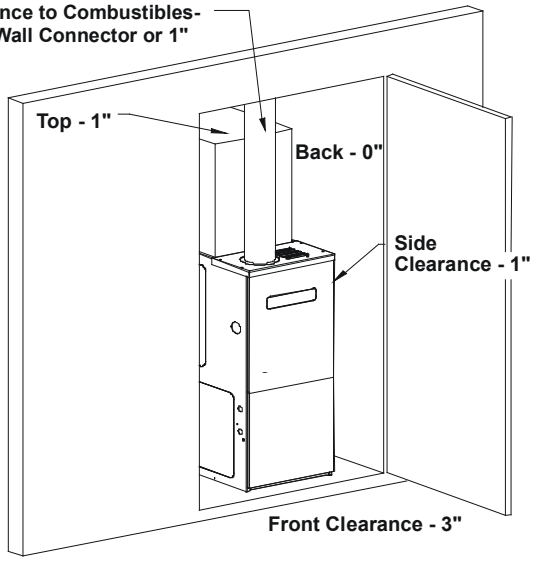

Figure 1

- Adequate combustion/ventilation air must be supplied to the closet. Improper or insufficient combustion air can expose building occupants to gas combustion products that could include carbon monoxide.
- Furnace must be **completely** sealed to floor or base. Combustion/ventilation air supply pipes must terminate 12” from top of closet and 12” from floor of closet. DO NOT remove solid base plate for side return.
- Return air ducts must be **completely** sealed to the furnace and terminate outside the enclosure surfaces.

Clearances and Accessibility

NOTE: For servicing or cleaning, a 24” front clearance is required. Unit connections (electrical, flue and drain) may necessitate greater clearances than the minimum clearances listed above. In all cases, accessibility clearance must take precedence over clearances from the enclosure where accessibility clearances are greater.

Clearances shall be in accordance with local installation codes, the requirements of the gas supplier and the manufacturer’s installation instructions.

Dégaugement conforme aux codes d’installation locaux, aux exigences du fournisseur de gaz et aux instructions d’installation du fabricant.

VENT		SIDES	FRONT	BACK	TOP (PLENUM)
B1-VENT	SINGLE				
1"	6"	1"	3"	0"	1"

Top clearance for horizontal configuration - 1"
Table 1

Installations must adhere to the clearances to combustible materials to which this furnace has been design certified. The minimum clearance information for this furnace is provided on the unit's clearance label. These clearances must be permanently maintained. Clearances must also accommodate an installation's gas, electrical, and drain line connections.

Installation Positions

An upflow furnace may be installed in an upright position or horizontal on either the left or right side panel. Do not install this furnace on its back. For vertically installed *upflow* furnaces, return air ductwork may be attached to the side panel(s) and/or basepan. For *horizontally* installed *upflow* furnaces, return air ductwork must be attached to the basepan. Contact your distributor for proper airflow requirements and number of required ductwork connections. Refer to, "Recommended Installation Positions" for appropriate installation positions, ductwork connections, and resulting airflow arrangements.

NOTE: Ductwork must never be attached to the back of the furnace.

Venting for Horizontal Left or Right Installations

Always use a B-vent elbow to vent the flue from the top of the furnace. The inducer cannot be turned due to limited space in the cabinet. Do not attempt to do this.

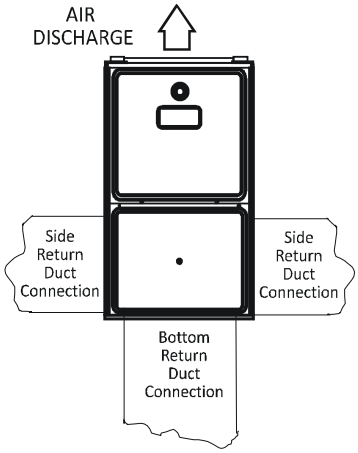

UPFLOW UPRIGHT
Figure 2

Horizontal Installation

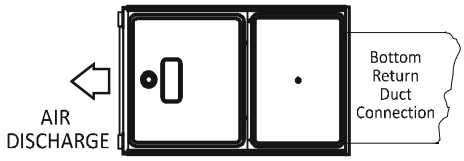

UPFLOW HORIZONTAL
LEFT AIR DISCHARGE

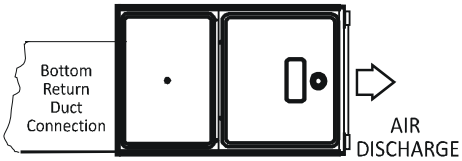

UPFLOW HORIZONTAL
RIGHT AIR DISCHARGE
Recommended Installation Positions
Figure 3

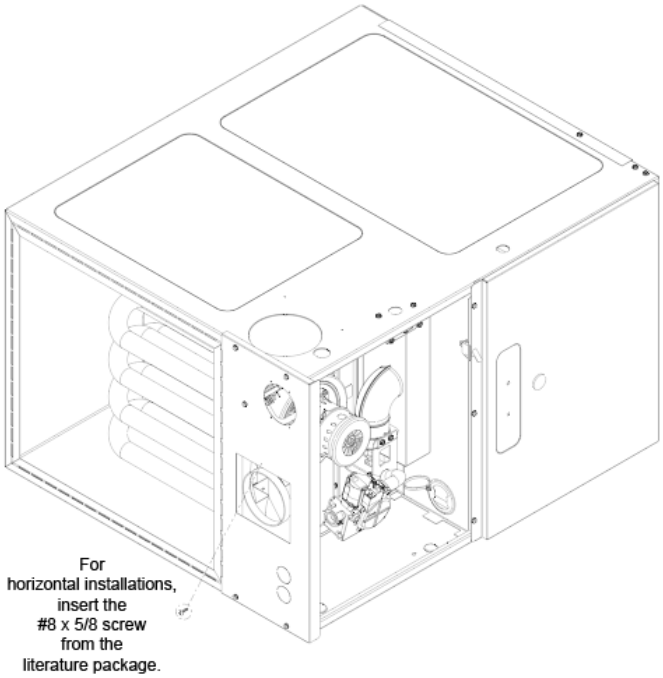

Figure 4

Line contact to framing is permitted when installed in the horizontal configuration. Line contact is defined as the portion of the cabinet that is formed by the intersection of the top and side. ACCESSIBILITY CLEARANCE, WHERE GREATER, SHOULD TAKE PRECEDENCE OVER MINIMUM FIRE PROTECTION CLEARANCE. A gas-fired furnace for installation in a residential garage must be installed so that the ignition source and burners are located not less than eighteen inches (18") above the floor and is protected or located to prevent physical damage by vehicles. A gas furnace must not be installed directly on carpeting, tile, or other combustible materials other than wood flooring.

Furnace Suspension

If suspending the furnace from rafters or joist, use ⅜" threaded rod and 2"x2"x⅜" angle iron as shown below. The length of rod will depend on the application and the clearances necessary.

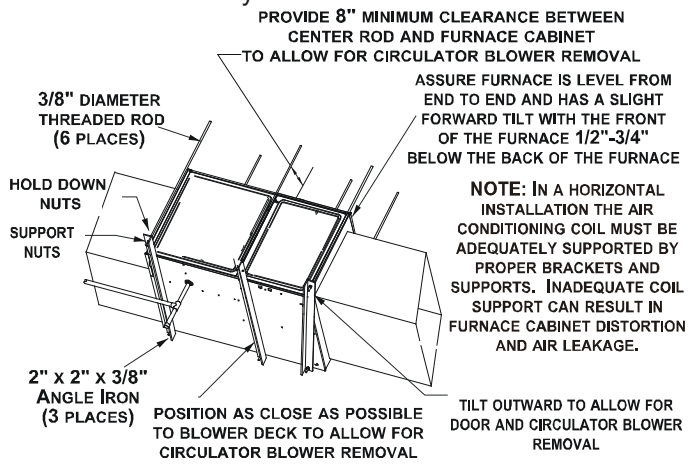

Suspended Furnace
Figure 5

Auxiliary Drain Pan

An auxiliary/secondary drain pan should be installed under a condensing furnace and/or indoor coil when any potential leakage could cause damage to ceilings, floors or other areas below the installation location. The auxiliary drain pan should be at least 1-½ inches deep, 3 inches larger than the unit and constructed of corrosion-resistant material. The drain pan should have a drain line connected to the pan and the drain line should be pitched downward away from the pan a minimum of ⅛" per foot of drain line. The drain line should terminate in a location where the water dripping from the drain line will alert the occupant that a problem exists. The auxiliary drain pan should also be equipped with a water level detection device conforming to UL 508 that will shut off the equipment served prior to overflow of the pan.

For upflow and horizontal installations, the furnace and/or indoor coil should be installed so that the equipment is at least 1-½ inches above the drain pan. Do not install the furnace and/or indoor coil directly into the auxiliary/secondary drain pan and do not use any wood product in the drain pan to elevate the furnace. Bricks, 2-inch concrete cap blocks, metal furnace stands, or furnace blocks can be used to elevate the furnace. For an upflow furnace installation, seal the entire bottom of the furnace before setting the furnace at least 1-½ inches above the drain pan.

Failure to properly install an auxiliary/secondary drain pan for a furnace and/or indoor coil can result in water damage to components and the furnace's metal cabinet.

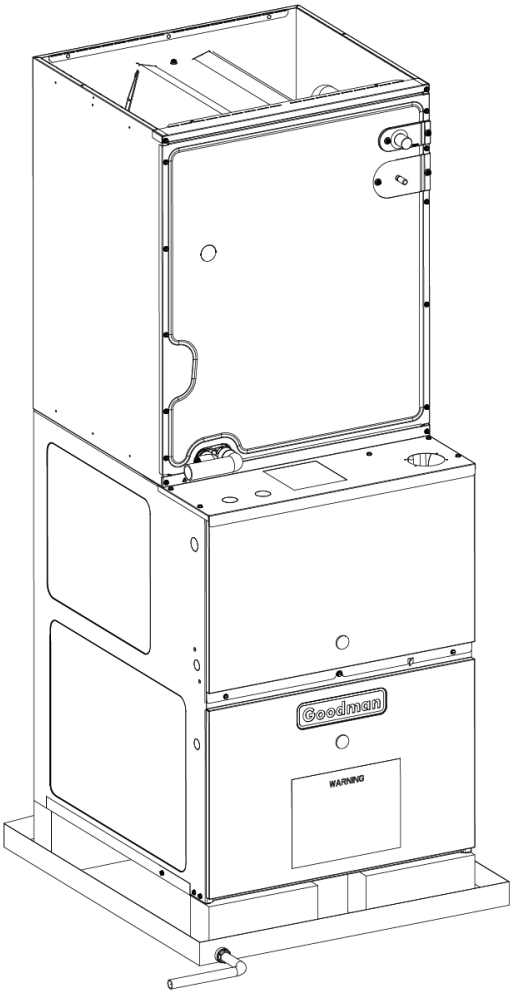

Figure 6

Existing Furnace Removal

NOTE: When an existing furnace is removed from a venting system serving other appliances, the venting system may be too large to properly vent the remaining attached appliances.

The following vent testing procedure is reproduced from the **American National Standard/National Standard of Canada for Gas-Fired Central Furnaces ANSI Z21.47-Latest Edition, CSA-2.3-Latest Edition Section 1.23.1.** The following steps shall be followed with each appliance connected to the venting system placed in operation, while any other appliances connected to the venting system are not in operation:

a. Seal any unused openings in the venting system;
b. Inspect the venting system for proper size and horizontal pitch, as required by the National Fuel Gas Code, ANSI Z223.1 and these instructions. Determine that there is no blockage or restriction, leakage, corrosion and other deficiencies which could cause an unsafe condition;

c. In so far as practical, close all building doors and windows and all doors between the space in which the appliance(s) connected to the venting system are located and other spaces of the building. Turn on clothes dryers and any appliance not connected to the venting system. Turn on any exhaust fans, such as range hoods and bathroom exhausts, so they shall operate at maximum speed. Do not operate a summer exhaust fan. Close fireplace dampers;
d. Follow the lighting instructions. Place the appliance being inspected in operation. Adjust thermostat so appliance shall operate continuously;
e. Test for draft hood equipped appliance spillage at the draft hood relief opening after 5 minutes of main burner operation. Use the flame of a match or candle;
f. After it has been determined that each appliance connected to the venting system properly vents when tested as outlined above, return doors, windows, exhaust fans, fireplace dampers and any other gas burning appliance to their previous conditions of use;
g. If improper venting is observed during any of the above tests, the common venting system must be corrected.

Corrections must be in accordance with the latest edition of the National Fuel Gas Code NFPA 54/ANSI Z223.1.

If resizing is required on any portion of the venting system, use the appropriate table in the latest edition of the National Fuel Gas Code ANSI Z223.1.

Thermostat Location

The thermostat should be placed approximately five feet from the floor on a vibration-free, inside wall in an area having good air circulation. Do not install the thermostat where it may be influenced by any of the following:

- Drafts, or dead spots behind doors, in corners, or under cabinets.
- Hot or cold air from registers.
- Radiant heat from the sun.
- Light fixtures or other appliances.
- Radiant heat from a fireplace.
- Concealed hot or cold water pipes, or chimneys.
- Unconditioned areas behind the thermostat, such as an outside wall.

Consult the instructions packaged with the thermostat for mounting instructions and further precautions.

COMBUSTION AND VENTILATION AIR REQUIREMENTS

WARNING

To avoid property damage, personal injury or death, sufficient fresh air for proper combustion and ventilation of flue gases must be supplied. Most homes require outside air be supplied into the furnace area.

Improved construction and additional insulation in buildings have reduced heat loss by reducing air infiltration and escape around doors and windows. These changes have helped in reducing heating/cooling costs but have created a problem supplying combustion and ventilation air for gas fired and other fuel burning appliances. Appliances that pull air out of the house (clothes dryers, exhaust fans, fireplaces, etc.) increase the problem by starving appliances for air.

House depressurization can cause back drafting or improper combustion of gas-fired appliances, thereby exposing building occupants to gas combustion products that could include carbon monoxide.

If this furnace is to be installed in the same space with other gas appliances, such as a water heater, ensure there is an adequate supply of combustion and ventilation air for all appliances. Refer to the latest edition of the National Fuel Gas Code NFPA 54/ANSI Z223.1 or applicable provisions of the local building codes for determining the combustion air requirements for the appliances.

This furnace must use indoor air for combustion. It cannot be installed as a direct vent (i.e., sealed combustion) furnace.

Most homes will require outside air be supplied to the furnace area by means of ventilation grilles or ducts connecting directly to the outdoors or spaces open to the outdoors such as attics or crawl spaces. A furnace installed in a confined space (i.e., a closet or utility room) must have two ventilation openings with a total minimum free area of 0.25 square inches per 1,000 BTU/hr of furnace input rating. Refer to Specification Sheet applicable to your model for minimum clearances to combustible surfaces. One of the ventilation openings must be within 12” of the top; the other opening must be within 12” of the bottom of the confined space. In a typical construction, the clearance between the door and door frame is usually adequate to satisfy this ventilation requirement.

The *R9S80-U furnaces are provided with a combustion air intake pipe kit which adds a combustion air intake pipe instead of relying on the louvers for combustion air. Please refer to the installation manual provided with the kit for additional information and instructions.

CATEGORY I VENTING (VERTICAL VENTING)

WARNING

To prevent possible personal injury or death due to asphyxiation, this furnace must be Category I vented. Do not vent using Category III venting.

Category I Venting is venting at a non-positive pressure. A furnace vented as Category I is considered a fan-assisted appliance and the vent system does not have to be "gas tight". **NOTE:** Single stage gas furnaces with induced draft blowers draw products of combustion through a heat exchanger allowing, in some instances, common venting with natural draft appliances (i.e. water heaters). All installations must be vented in accordance with the latest edition of the National Fuel Gas Code NFPA 54/ANSI Z223.1.

NOTE: The vertical height of the category 1 venting system must be at least as great as the horizontal length of the vertical system.

WARNING

To prevent possible personal injury or death due to asphyxiation, common venting with other manufacturer's induced draft appliances is not allowed.

The minimum vent diameter for the Category I venting system is as shown:

MODEL	MINIMUM VENT
	UPFLOW
40	4 Inch
60	4 Inch
80	4 Inch

Table 2

Under some conditions, larger vents than those shown above may be required or allowed. *When an existing furnace is removed from a venting system serving other appliances*, the venting system may be too large to properly vent the remaining attached appliances.

MASONRY CHIMNEYS

WARNING

Possibility of property damage, personal injury or death. Damaging condensation can occur inside masonry chimneys when a single fan-assisted Category I appliance (80% AFUE Furnace) is vented without adequate dilution air. Do not connect an 80% furnace to a masonry chimney unless the furnace is common vented with a draft hood equipped appliance or the chimney is lined with a metal liner or type B metal vent. All installations using masonry chimneys must be sized in accordance with the appropriate venting tables. If an 80% furnace is common vented with a draft hood equipped appliance, the potential for condensation damage may still exist with extremely cold conditions, long vent connectors, exterior chimneys, or any combination of these conditions. The risk of condensation damage is best avoided by using masonry chimney as a pathway for properly sized metal liner or type B metal vent.

Masonry Chimney Termination

A masonry chimney used as a vent for gas fired equipment must extend at least three feet above the highest point where it passes through the roof. It must extend at least two feet higher than any portion of a building within a horizontal distance of 10 feet. In addition, the chimney must terminate at least 3 feet above any forced air inlet located within 10 feet. The chimney must extend at least five feet above the highest connected equipment draft hood outlet or flue collar.

ELECTRICAL CONNECTIONS

WARNING

HIGH VOLTAGE!
To avoid personal injury or death due to electrical shock, disconnect electrical power before servicing or changing any electrical wiring.

CAUTION

Label all wires prior to disconnection when servicing controls. Wiring errors can cause improper and dangerous operation. Verify proper operation after servicing.

WARNING

HIGH VOLTAGE!
To avoid risk of injury, electrical shock or death, the furnace must be electrically polarized and grounded in accordance with local codes or their absence, with the latest edition of the National Electric Code.

Wiring Harness

The wiring harness is an integral part of this furnace. Field alteration to comply with electrical codes should not be required. Wires are color coded for identification purposes. Refer to the wiring diagram for wire routings. If any of the original wire as supplied with the furnace must be replaced, it must be replaced with wiring material having a temperature rating of at least 105°C. Any replacement wiring must be a copper conductor.

120 Volt Line Connections

Before proceeding with electrical connections, ensure that the supply voltage, frequency, and phase correspond to that specified on the unit rating plate. Power supply to the furnace must be NEC Class 1, and must comply with all applicable codes. The furnace must be electrically grounded in accordance with local codes or, in their absence, with the latest edition of The National Electric Code, ANSI NFPA 70.

Use a separate fused branch electrical circuit containing properly sized wire, and fuse or circuit breaker. The fuse or circuit breaker must be sized in accordance with the maximum overcurrent protection specified on the unit rating plate. An electrical disconnect must be provided at the furnace location.

Line voltage wiring must enter into the junction box provided with the furnace. Connect hot, neutral and ground wires as shown in the wiring diagram located on the unit's blower door. Metal conduit is not considered a substitute for an actual ground wire to the unit.

Line polarity must be observed when making field connections. Line voltage connections can be made through either the right or left side panel. To relocate the junction box, follow the steps shown in the Junction Box Relocation section.

Junction Box Relocation

WARNING

Edges of sheet metal holes may be sharp. Use minimum A9 rated gloves as a precaution when removing hole plugs.

Line voltage connections can be made through either the right or left side panel. The furnace is shipped configured for a right side electrical connection. To make electrical connections through the opposite side of the furnace, the junction box must be relocated to the left side prior to making electrical connections. To relocate the junction box, perform the following steps.

WARNING

To prevent personal injury or death due to electric shock, disconnect electrical power before installing or servicing this unit.

1. Remove both doors from the furnace.
2. Remove and save the screws holding the junction box to the right side of the furnace.
3. Models that have the junction box located in the burner compartment will need to move the junction box directly over.
4. Attach the junction box to the left side of the furnace, using the screws removed in step 2.
5. Check the location of the wiring. Confirm that it will not be damaged by heat from the burners or by the rotation of the fan. Also confirm that wiring location will not interfere with filter removal or other maintenance.

After the junction box is in the desired location, use washers to connect field-supplied conduit to the junction box in accordance with NEC and local codes. Connect hot, neutral, and ground wires as shown in the furnace wiring diagram. The wires and ground screw are located in the furnace junction box.

Low voltage wires may be connected to the terminal strip.

IMPORTANT NOTE: To avoid possible equipment malfunction, route the low voltage wires to avoid interference with filter removal or other maintenance.

WARNING

HIGH VOLTAGE!
To avoid risk of injury, electrical shock or death, the furnace must be electrically polarized and grounded in accordance with local codes or their absence, with the latest edition of the National Electric Code.

To ensure proper unit grounding, the ground wire should run from the furnace ground screw or green ground wire located inside the furnace junction box all the way back to the electrical panel. **NOTE:** Do not use gas piping as an electrical ground. To confirm proper unit grounding, turn off the electrical power and perform the following check.

1. Measure resistance between the neutral (white) connection and the unpainted surface on the furnace.
2. Resistance should measure 10 ohms or less.

This furnace is equipped with a blower door interlock switch which interrupts unit voltage when the blower door is opened for servicing. Do not defeat this switch.

24 Volt Thermostat Wiring

NOTE: Wire routing must not interfere with circulator blower operation, filter removal, or routine maintenance.

Low voltage connections can be made through either the right or left side panel. Thermostat wiring entrance holes are located in the blower compartment. The following figure shows connections for a “heat only” system and “heat/cool system”.

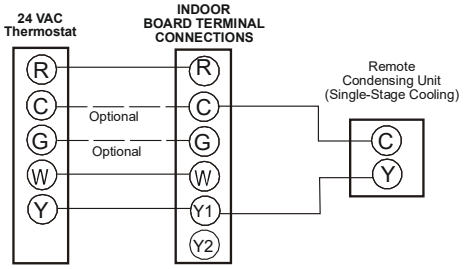

Non-communicating Single Stage A/C
Figure 7A

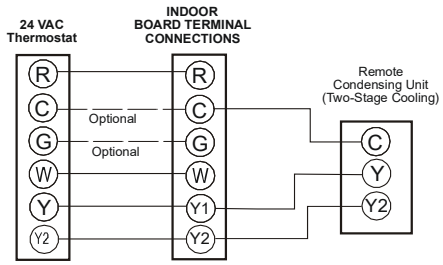

Non-communicating Two Stage A/C
Figure 7B

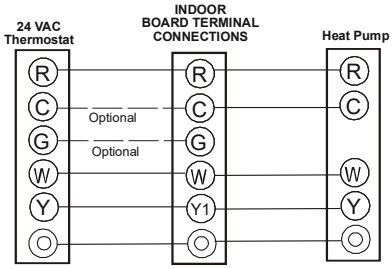

Non-Communicating Single Stage Heat Pump
Figure 7C

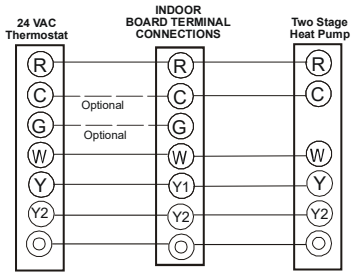

Non-Communicating Two Stage Heat Pump
Figure 7D

NOTE: Equipment type (Single-stage cooling, Two-stage cooling, Single-stage heat pump, Two-stage heat pump) MUST be setup through the OdS menu by the installer for proper system operation. See Using Push Buttons for instructions on how to navigate the control menu.

This furnace is equipped with a 40 VA transformer to facilitate use with most cooling equipment. Consult the wiring diagram, located on the blower compartment door, for further details of 120 Volt and 24 Volt wiring.

A single-stage thermostat with only one heating stage is needed to control this furnace.

Low Voltage Ventilation

The Ventilation connections provide a dry contact for field ventilator wiring connections. These connections are normally open and energize during the R-32 fault/alarm condition. A VENT IN and a VENT OUT connectors are provided and are shown in the image below.

Low Voltage A2L Alarm

The A2L alarm connection provides 24VAC for field alarm wiring connections. These connections are normally open and energize during the R-32 fault/alarm condition. An A2L Alarm connector is provided and is shown in the image below.

Field Installed Accessories (Daughter Board)

Additional accessories that do not have dedicated terminals on the furnace control board may require an additional daughter board to be installed. Please refer to service manual on your product for more information.

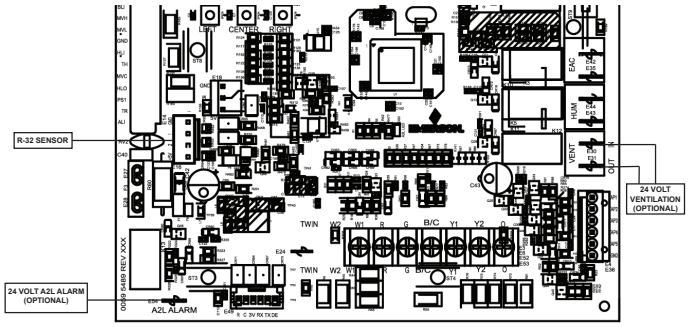

24 VAC Accessories - Accessories Wiring
Figure 8

120 Volt Line Connection of Accessories Humidifier and Electronic Air Cleaner

WARNING

HIGH VOLTAGE!
To avoid personal injury or death due to electrical shock, disconnect electrical power before servicing or changing any electrical wiring.

WARNING

All accessories that may become a potential ignition source if installed, such as electronic air cleaners, must only be powered through Daikin accessory control board kit. If an electronic air cleaner is already installed in the duct work and not connected to the accessory control board, it will have to be disabled or removed. Ensure that any additional wiring from the indoor unit to the accessory control board is routed and protected from damage and wear, avoiding the flue pipe and any joints that may need brazed or disconnected for service. Refer to the product specification sheet for the accessory control board kit part number.

The furnace integrated control module is equipped with dedicated ¼ inch EAC and HUM relay terminals for controlling external power to an optional field-supplied humidifier and/or electronic air cleaner. Additional line voltage wiring to the inside of the furnace must conform to all local codes and have a minimum temperature rating of 105°C. All line voltage wire splices must be made inside the furnace.

When utilized, the HUM relay will be closed during normal heating operation and the EAC relay will be closed during fan operation. 120VAC must be present on the one terminal from HUM or EAC to take advantage of the second terminal.

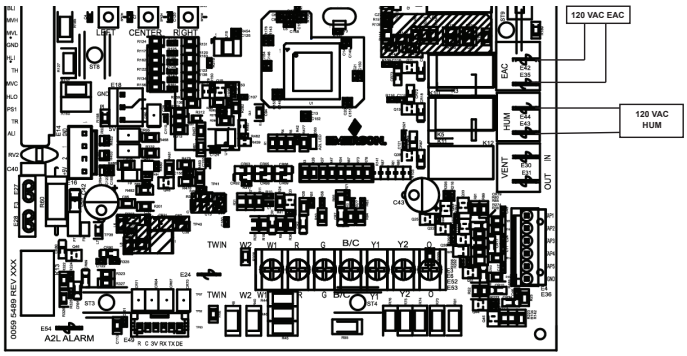

120 Volt Line Connection of Accessories Humidifier (HUM) & Electronic Air Cleaner (EAC)
Figure 9

Fossil Fuel Applications

This furnace can be used in conjunction with a heat pump in a fossil fuel application. A fossil fuel application refers to a combined gas furnace and heat pump installation which uses an outdoor temperature sensor to determine the most cost efficient means of heating heat pump or gas furnace.

A heat pump thermostat with *two stages of heat* is required to properly use a furnace in conjunction with a heat pump. Refer to the fossil fuel kit installation instructions for additional thermostat requirements.

Strictly follow the wiring guidelines in the fossil fuel kit installation instructions. All furnace connections must be made to the furnace integrated control module and the FURNACE terminal strip on the fossil fuel control board.

Twinning

For Furnace Twinning information, please refer to the Furnace Twinning installation manual IO-2001. Please scan the QR code below to open the document.

NOTE: Each furnace must be connected to it's own 120 VAC power supply. The L1 connection to each furnace must be in phase (connected to circuit breakers on the same 120 VAC service panel phase leg). To verify that the furnaces are in phase, check from L1 to L1 on each furnace with a voltmeter. If the furnaces are in phase, the voltage between both furnaces will be ZERO.

GAS SUPPLY AND PIPING

The furnace rating plate includes the approved furnace gas input rating and gas types. The furnace must be equipped to operate on the type of gas applied.

CAUTION

To prevent unreliable operation or equipment damage, the inlet gas supply pressure must be as specified on the unit rating plate with all other household gas fired appliances operating.

Inlet gas supply pressures must be maintained within the ranges specified in the following table. The supply pressure must be constant and available with all other household gas fired appliances operating. The minimum gas supply pressure must be maintained to prevent unreliable ignition. The maximum must not be exceeded to prevent unit overfiring and damage to gas valve.

NOTE: Do not remove the gas valve inlet plug before the gas line is installed. Replace if water or debris has been introduced.

INLET GAS SUPPLY PRESSURE		
Natural Gas	Minimum: 4.5" w.c.	Maximum: 10.0" w.c.

Table 3

High Altitude Derate

This furnace is factory-configured for standard operation at altitudes between **0 and 2,000 ft (0–610 m)**. For installations **above 2,000 ft**, it may be necessary to adjust the shared data to maintain proper combustion performance and efficiency.

1. **Determine Installation Altitude**
   Verify the site elevation above sea level. If installation altitude exceeds **2,000 ft** (please refer to Table 5), shared data adjustment is required.
2. **Access Adjustment Settings**
   a. Turn off all power at the disconnect switch or breaker.
   b. Wait at least **30 seconds** for the control board to be fully discharged.
   c. Remove the furnace front access panel, locate the **main control board (PCB)** and Identify the **Shared Data Port.**
   d. **Use the BTPIM01 module to enable the Bluetooth connection to the CoolCloud HVAC app** (DO NOT use the BTSDL01 on this furnace). Please refer to the below device layout:

Figure 10A

Figure 10B

   e. Restore power to the furnace enabling communication via Bluetooth.
   f. Using the CoolCloud App, connect your mobile device and select the appropriate furnace model and serial number.
   g. Select Load Shared Data or Upload Configuration and ensure your app or device has the correct shared data revision selected for high-altitude operation. ***Refer to Table 6.***
   h. Follow on-screen instructions to transfer the data to the control board.
   i. Wait for confirmation that the transfer is complete (via solid LED or app notification)
   j. Power cycle the furnace; turn off all power at the disconnect switch or breaker and wait **10 seconds** minimum.
   k. Remove the BTPIM01 module
   l. Restore power to the furnace and observe control board 3-digit LED display:
      - **Code "d0"** – No Shared Data Detected
      - **Code "d1"** – Invalid Shared Data
      - **No Code / Normal Operation** – Installation Successful
   m. Confirm proper data revision and configuration through the **CoolCloud App**.
   n. Replace the access panel, secure all fasteners and verify furnace operation through a full heating cycle.
3. **Verify Gas Manifold Pressure**
   a. Confirm that manifold pressure matches the value listed on the **unit serial plate.**
   b. Refer to the Gas Supply Pressure Measurement section of this manual for instructions on measuring and adjusting **outlet pressure** using a manometer.
4. **Combustion Verification**
   a. Operate the furnace for at least **15 minutes** prior to combustion testing.
   b. Using a calibrated combustion analyzer, measure **CO_2 levels** in the flue gas.
   c. Compare results with the **acceptable CO_2 range** listed in the manufacturer's specifications.

80% MODEL (BTU/Hr.)	CO2% RANGE
40,000	5.5-7.0
60,000	5.7-7.2
80,000	6.0-7.5

Table 4

   d. If CO_2 is out of range, recheck shared data configuration and gas settings.

Furnace Models		0-2000 FT	2000-7800FT	7800-10000FT
AR9S800403AU	GR9S800403AU	No Change		
AR9S800603AU	GR9S800603AU	No Change	YES	YES
AR9S800604BU	GR9S800604BU	No Change	YES	YES
AR9S800804BU	GR9S800804BU	No Change	NO	YES
AR9S800805CU	GR9S800805CU	No Change	YES	YES

Table 5

S. No.	Model	High-Attitude Range (Feet)	Shared Data File Name
1	AR9S800603AU	2,000 - 7,800	AR9S800603AUAD HA2000-7800FT
2	GR9S800603AU	2,000 - 7,800	GR9S800603AUAD HA2000-7800FT
3	AR9S800603AU	7,800 - 10,000	AR9S800603AUAD HA7800-10000FT
4	GR9S800603AU	7,800 - 10,000	GR9S800603AUAD HA7800-10000FT
5	AR9S800604BU	2,000 - 7,800	AR9S800604BUAC HA2000-7800FT
6	GR9S800604BU	2,000 - 7,800	GR9S800604BUAC HA2000-7800FT
7	AR9S800604BU	7,800 - 10,000	AR9S800604BUAC HA7800-10000FT
8	GR9S800604BU	7,800 - 10,000	GR9S800604BUAC HA7800-10000FT
9	AR9S800804BU	7,800 - 10,000	AR9S800804BUAC HA7800-10000FT
10	GR9S800804BU	7,800 - 10,000	GR9S800804BUAC HA7800-10000FT
11	AR9S800805CU	2,000 - 7,800	AR9S800805CUAC HA2000-7800FT
12	GR9S800805CU	2,000 - 7,800	GR9S800805CUAC HA2000-7800FT
13	AR9S800805CU	7,800 - 10,000	AR9S800805CUAC HA7800-10000FT
14	GR9S800805CU	7,800 - 10,000	GR9S800805CUAC HA7800-10000FT

Table 6

Gas Piping Connections

WARNING

To avoid possible unsatisfactory operation or equipment damage due to underfiring of equipment, use the proper size of natural gas piping needed when running pipe from the meter to the furnace.

When sizing gas lines, be sure to include all appliances on the same gas supply line and which will operate simultaneously.

The gas piping supplying the furnace must be properly sized based on the gas flow required, specific gravity of the gas, and length of the run. The gas line installation must comply with local codes, or in their absence, with the latest edition of the National Fuel Gas Code, NFPA 54/ANSI Z223.1.

Natural Gas Capacity of Pipe
In Cubic Feet of Gas Per Hour (CFH)

Length of Pipe in Feet	Nominal Black Pipe Size				
	1/2"	3/4"	1"	1 1/4"	1 1/2"
10	132	278	520	1050	1600
20	92	190	350	730	1100
30	73	152	285	590	980
40	63	130	245	500	760
50	56	115	215	440	670
60	50	105	195	400	610
70	46	96	180	370	560
80	43	90	170	350	530
90	40	84	160	320	490
100	38	79	150	305	460

(Pressure 0.5 psig or less and pressure drop of 0.3" W.C.; Based on 0.60 Specific Gravity Gas)

$$\text{CFH} = \frac{\text{BTUH Furnace Input}}{\text{Heating Value of Gas (BTU/Cubic Foot)}}$$

Table 7

To connect the furnace to the building's gas piping, the installer must supply a ground joint union, drip leg, manual shutoff valve, and line and fittings to connect to gas valve. In some cases, the installer may also need to supply a transition piece from ½" pipe to a larger pipe size. The following stipulations apply when connecting gas piping.

- Gas piping must be supported external to the furnace cabinet so that the weight of the gas line does not distort the burner rack, manifold or gas valve.
- Use black iron or steel pipe and fittings for the building piping. Where possible, use new pipe that is properly chamfered, reamed, and free of burrs and chips. If old pipe is used, be sure it is clean and free of rust, scale, burrs, chips, and old pipe joint compound.
- Use pipe joint compound on male threads ONLY. Always use pipe joint compound (pipe dope) that is APPROVED FOR ALL GASES. DO NOT apply compound to the first two threads.
- Use ground joint unions.
- Install a drip leg to trap dirt and moisture before it can enter the gas valve. The drip leg must be a minimum of three inches long.
- Install a ⅛" NPT pipe plug fitting, accessible for test gage connection, immediately upstream of the gas supply connection to the furnace.
- Always use a back-up wrench when making the connection to the gas valve to keep it from turning. The orientation of the gas valve on the manifold must be maintained as shipped from the factory. Maximum torque for the gas valve connection is 375 in-lbs; excessive over-tightening may damage the gas valve and/or gas manifold assembly.
- Install a manual shutoff valve between the gas meter and unit within six feet of the unit. If a union is installed, the union must be downstream of the manual shutoff valve, between the shutoff valve and the furnace.
- Tighten all joints securely.
- Protect connectors and semi-rigid tubing against physical and thermal damage when installed. Ensure aluminum-alloy tubing and connectors are coated to protect against external corrosion when in contact with masonry, plaster, or insulation, or subjected to repeated wetting by liquids such as water (except rain water), detergents, or sewage. The gas piping may enter the left or right side of the furnace cabinet. The installer must supply rigid pipe long enough to reach the outside of the cabinet to seal the grommet cabinet penetration. A semi-rigid connector to the gas piping can be used outside the cabinet per local codes. ½" NPT pipe and fittings are required. These models require one 90 deg elbow, one 2" nipple and additional nipple to reach outside the cabinet. A semi-rigid connector to the gas piping can be used outside the cabinet per local codes. From the elbow, the length of pipe and the fittings required will vary by the side chosen, location of union and cabinet width. The union may be placed inside or outside of the cabinet.

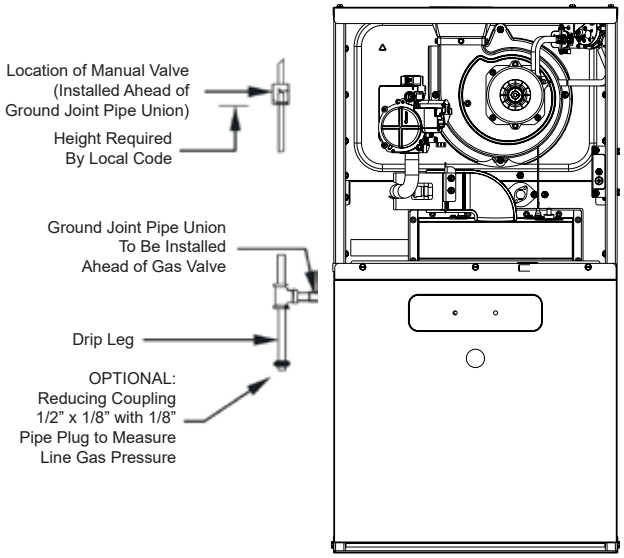

General Furnace Layout
Figure 11

Upflow Installations

A ground joint union, drip leg, and manual shutoff valve must also be supplied by the installer. In some cases, the installer may also need to supply a transition piece from ½" to another pipe size.

When the gas piping enters through the side of the furnace, the installer must supply the following fittings (starting from the gas valve nipple elbow):

- Straight pipe to reach the exterior of the furnace.
- A ground joint union, drip leg, and manual shutoff valve must also be supplied by the installer.

Gas Piping Checks

Before placing unit in operation, leak test the unit and gas connections.

WARNING

To avoid the possibility of explosion or fire, never use a match or open flame to test for leaks.

Check for leaks using an approved chloride-free soap and water solution, an electronic combustible gas detector, or other approved testing methods.

CAUTION

To prevent property damage or personal injury due to fire, the following instructions must be performed regarding gas connections, pressure testing, location of shutoff valve and installation of gas piping.

NOTE: Never exceed specified pressures for testing. Higher pressure may damage the gas valve and cause subsequent overfiring, resulting in heat exchanger failure.

Disconnect this unit and shutoff valve from the gas supply piping system before pressure testing the supply piping system with pressures in excess of ½ psig (3.48 kPa).

This unit must be isolated from the gas supply system by closing its manual shutoff valve before pressure testing of gas supply piping system with test pressures equal to or less than ½ psig (3.48 kPa).

WARNING

If the gas furnace is installed in a basement, an excavated area or confined space, it is strongly recommended to contact a certified contractor to install a gas detecting warning device in case of a gas leak.

CIRCULATING AIR AND FILTERS

Ductwork - Air Flow

WARNING

Never allow the products of combustion, including carbon monoxide, to enter the return ductwork or circulation air supply.

Duct systems and register sizes must be properly designed for the CFM and external static pressure rating of the furnace. Ductwork should be designed in accordance with the recommended methods of "Air Conditioning Contractors of America" Manual D.
A duct system must be installed in accordance with Standards of the National Fire Protection Association, NFPA 90A and 90B.

A closed return duct system must be used, with the return duct connected to the furnace. **NOTE:** Ductwork must never be attached to the back of the furnace. For installations requiring more than 1600 CFM, use a bottom return or two sided return to help reduce noise and provide smoother airflow for heating. Supply and return connections to the furnace may be made with flexible joints to reduce noise transmission. To prevent the blower from interfering with combustion air or draft when a central return is used, a connecting duct must be installed between the unit and the utility room wall. Furnace is shipped with the top flanges in the flat position. Before installing a coil or ducts, the flanges must be bent 90°. A room, closet, or alcove must not be used as a return air chamber.

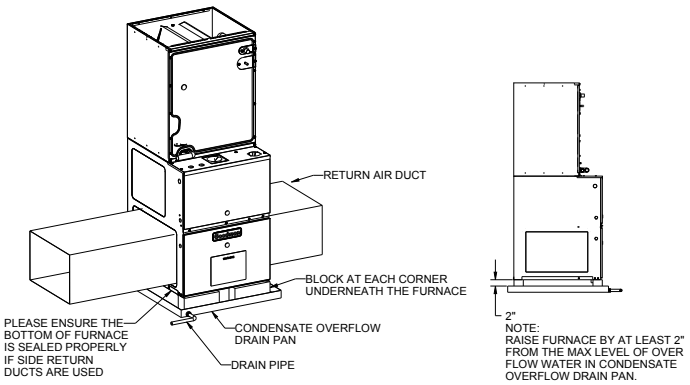

Figure 12

When the furnace is used in connection with a cooling unit, the furnace should be installed upstream of the cooling coil.

When the furnace is installed without a cooling coil, it is recommended that a removable access panel be provided in the outlet air duct. This opening shall be accessible when the furnace is installed and shall be of such a size that the heat exchanger can be viewed for visual light inspection or such that a sampling probe can be inserted into the airstream. The access panel must be made to prevent air leaks when the furnace is in operation.

NOTE: In a horizontal installation the air conditioning coil must be adequately supported by proper brackets and supports. Inadequate coil support can result in furnace cabinet distortion and air leakage.

When the furnace is heating, the temperature of the return air entering the furnace must be between 60°F and 80°F.

When a furnace is installed so that supply ducts carry air circulated by the furnace to areas outside the space containing the furnace, the return air shall also be handled by a duct sealed to the furnace casing and terminating outside the space containing the furnace.

WARNING

Edges of sheet metal holes may be sharp. Use minimum A9 rated gloves as a precaution when removing sheet metal from return air openings.

Filters - Read This Section Before Installing The Return Air Ductwork

Filters must be used with this furnace. Discuss filter maintenance with the building owner. Filters do not ship with this furnace, but must be provided by the installer.

Filters must comply with UL900 or CAN/ULCS111 standards. Damage or repairs due to failure to install filters in the furnace are not covered under the warranty.

NOTE: An undersized opening will cause reduced airflow. Refer to the Filter Sizing Chart to determine filter area requirements.

Upright Installations

Depending on the installation and/or customer preference, differing filter arrangements can be applied. Filters can be installed in the central return register or a side panel external filter rack kit (upflows). As an alternative, a media air filter or electronic air cleaner can be used as the primary filter. The following figure shows possible filter locations.

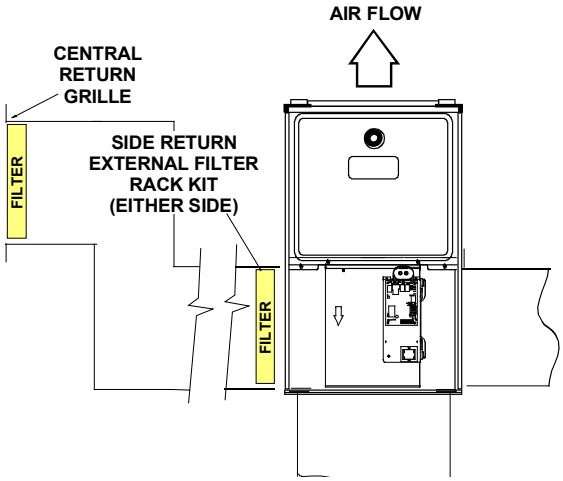

Upright Upflow
Figure 13

Circulation Air Filters

One of the most common causes of a problem in a forced air heating system is a blocked or dirty filter. Circulating air filters must be inspected monthly for dirt accumulation and replaced if necessary. Failure to maintain clean filters can cause premature heat exchanger failure.

A new home may require more frequent replacement until all construction dust and dirt is removed. Circulating air filters are to be installed in the return air duct external to the furnace cabinet.

Upflow / Horizontal Models	Minimum Recommended Filter Size^
*R9S8000403AU	1 - 16 X 25 Side or 1 -14 X 24 Bottom Return
*R9S800603AU	1 - 16 X 25 Side or 1 -14 X 24 Bottom Return
*R9S800604BU	1 - 16 X 25 Side or 1 - 16 X 25 Bottom Return
*R9S800804BU	1 - 16 X 25 Side or 1 - 16 X 25 Bottom Return
*R9S800805CU	2 - 16 X 25 Side Return or 1 - 20 X 25 Bottom Return

^Larger filters may be used, filters may also be centrally located
Table 8

Horizontal Installations

Filters must be installed in either the central return register or in the return air duct work.

NORMAL SEQUENCE OF OPERATION

Power Up

- 120 VAC power applied to furnace.
- Integrated ignition control performs internal checks.
- Upon power-up of the control board, all Seven segments will be illuminated displaying “8 8 8”. After power-up the displays will show “I d L”, idle, or stand-by mode.
- The control is now ready to receive demands from the room thermostat. Refer to Status Menu in this manual for interpretation of items displayed in the status menu.

Gas Heating Mode

The normal operational sequence in gas heating mode is as follows:

- R and W thermostat contacts close, initiating a call for heat. The control will display heat mode in status menu: - g h
- Integrated control module performs safety circuit checks.
- Induced draft blower is energized for 30 second pre-purge period causing pressure sensor contacts to close.
- Igniter warm up begins after 30 second prepurge expires.
- Gas valve opens at end of igniter warm up period, delivering gas to burners and establishing flame.
- Integrated control module monitors flame presence. Gas valve will remain open only if flame is detected.

- Circulator blower is energized on user selected heat speed following a fixed thirty second blower on delay. Electronic air cleaner and humidifier terminal relays are energized with circulator blower.
- Furnace operates; integrated control module monitors safety circuits continuously.
- R and W thermostat contacts open, completing the call for heat.
- Gas valve closes, extinguishing flame.
- Induced draft blower is de-energized following a thirty second post purge.
- HUM terminal relay is de-energized.
- Circulator blower continues running for selected heat off delay. If required this can be changed in the field.
- Electronic air cleaner is de-energized.
- Furnace awaits the next call from thermostat.

Cooling Mode

The control board support two stages of cooling. If this furnace is installed with a single stage cooling unit or heat pump, the Y1 terminal of the control board must be used. A Y2 call on the control board will be ignored if a Y1 call is not present.

COOLING MODE SEQUENCE OF OPERATION

1st Stage Cooling Mode Sequence:

- On a call for low stage cooling, the Y1 or Y1 and G thermostat contacts close signaling the furnace control board with 24 vac. on Y1 or Y1 and G terminals.
- The 7-Segment will display: 1 A C
- The compressor and condenser fan are energized.
- The circulator fan is energized at low cool speed after the cool on delay period. The electronic air cleaner EAC relay will close the EAC contacts.
- After the thermostat is satisfied, the compressor and condenser fan are de-energized and the Cool Mode Fan Off Delay period begins.
- Following the Cool Mode Fan Off Delay period, the indoor fan and air cleaner relays are de-energized

2nd Stage Cooling Mode Sequence:

NOTE: A Y1 call must be present or a Y2 call will be ignored.

- On a call for 2nd stage cooling, the Y2 or Y2 and G thermostat contacts close signaling the furnace control board with 24 vac. on Y2 or Y2 and G terminals.
- The 7-Segment will display: 2 A C
- The compressor and condenser fan are energized.
- The circulator fan is energized at cool speed after a cool on delay. The electronic air cleaner EAC relay will close the EAC contacts.
- After the thermostat is satisfied, the compressor and condenser fan are de-energized and the Cool Mode Fan Off Delay period begins.
- Following the Cool Mode Fan Off Delay period, the indoor fan and air cleaner relays are de-energized

HEAT PUMP MODE

1st Stage HP Heating Mode Sequence:

- On a call for low stage HP Heating, the Y1 or Y1 and G thermostat contacts close signaling the furnace control board with 24 vac. on Y1 or Y1 and G terminals.
- The 7-Segment will display: 1 H P
- The compressor and condenser fan are energized.
- The circulator fan is energized at HP1 fan speed after the HP on delay period. The electronic air cleaner, EAC, and humidifier, HUM, relays will close the contacts.
- After the thermostat is satisfied, the compressor and condenser fan are de-energized. The HP Heat Mode Fan Off Delay period begins.
- Following the HP Heat Mode Fan Off Delay period, the indoor fan, EAC, & HUM relays are de-energized.

2nd Stage HP Heating Mode Sequence:

NOTE: A Y1 call must be present or a Y2 call will be ignored.

- On a call for 2nd stage HP Heating, the Y2 or Y2 and G thermostat contacts close signaling the furnace control board with 24 vac. on Y2 or Y2 and G terminals.
- The 7-Segment will display: 2 H P
- The compressor and condenser fan are energized.
- The circulator fan is energized at HP2 fan speed after the HP on delay period. The electronic air cleaner EAC and humidifier HUM relays will close the contacts.
- After the thermostat is satisfied, the compressor and condenser fan are de-energized. The HP Heat Mode Fan Off Delay period begins.
- Following the HP Heat Mode Fan Off Delay period, the indoor fan, EAC, & HUM relays are de-energized.

Fan Only Mode

The normal operational sequence in fan only mode is as follows:

- R and G thermostat contacts close, initiating a call for fan.
- Integrated control module performs safety circuit checks.
- Circulator blower is energized on user selected fan speed. Electronic air cleaner terminal relay is energized.
- Circulator blower runs, integrated control module monitors safety circuits continuously.
- R and G thermostat contacts open, completing the call for fan.
- Circulator blower is de-energized. Electronic air cleaner terminal relay is de-energized.
- Furnace awaits the next call from thermostat.

Defrost Mode

Defrost call can only be generated with heat pump outdoor unit properly configured in the OdS menu.

- On a call for Defrost, the Y1 or Y1 with Y2 with/without O contacts and W thermostat contacts close signaling the furnace control board to enter defrost.
- If Y with O and W are present simultaneously, the blower shall be energized at Cooling Speed after COOL on delay, then, switch the blower speed to the Greater of (Cooling Speed or Gas Heat speed) after Gas Heat On Delay expired.
- If Y without O and W are present simultaneously, the blower shall be energized at HP Heat Speed after HP Heat On Delay, then, switch the blower speed to the Greater of (HP Heat Speed or Gas Heat speed) after Gas Heat On Delay expired.
- The 7-Segment will display: d F t
- The electronic air cleaner EAC and humidifier HUM relays will close the contacts.
- After the thermostat is satisfied, the gas valve will de-energize. The Gas Heat Mode Fan Off Delay period begins.
- Following the Gas Heat Mode Fan Off Delay period, the indoor fan, EAC, & HUM relays are de-energized.

START-UP PROCEDURE AND ADJUSTMENT

NOTE: This furnace is equipped with a control board that is capable of monitoring for R-32 refrigerant leaks in the indoor refrigeration unit. Please verify that the R-32 sensor wire is plugged in to the furnace control board before startup, if applicable. If furnace is not paired with an R-32 Refrigeration system, the default settings in the furnace control board will need to be changed. Please see the R-32 section for additional information.

Furnace must have a 120 VAC power supply properly connected and grounded. Proper polarity must be maintained for correct operation. An interlock switch prevents furnace operation if the blower door is not in place. Keep the blower access door in place except for inspection and maintenance.

The integrated furnace control board is equipped with three push buttons used to access & navigate menus for furnace setup & settings. The 3 x Seven Segment Displays on the control board will show the current selection.

Upon power-up of the control board, all Seven segments will be illuminated displaying “8 8 8”. After power-up the displays will show “I d L”, idle, or stand-by mode. The control is now ready to receive demands from the room thermostat. Refer to Status Menu in this manual for interpretation of items displayed in the status menu.

Quick Start

Initial set up of outdoor systems are required to be configured through the control board. Navigate to OdS menu using the push buttons to properly configure the outdoor system. Selections for AC1, AC2, HP1, HP2 must be made to enable specific fan speeds and thermostat signals to function.

NOTE: Equipment type (Single-stage cooling, Two-stage cooling, Single-stage heat pump, Two-stage heat pump) MUST be setup through the OdS menu by the installer for proper system operation.

Using Push Buttons

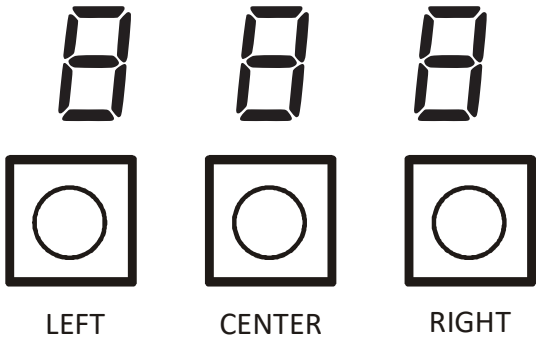

Figure 14

The furnace includes three on-board push buttons allowing users to navigate indoor and outdoor system menus. The Right and Left buttons allow the user to scroll through the main menus and to then scroll through available options within specific menus. The Center button is used to enter into a main menu and to then permanently select options within those menus.

NOTE: After scrolling to the desired option within a menu, that option may be flashing on the 7-segment displays. This indicates the option has not been officially selected. Pressing the Center button two times will select that option. The first press will stop the flashing. The second will make the selection official and return you to the main menu.

Control Board Main Menu

Menu Description	Main Menu			Option Menu			Display Text	Additional Info
	SEGT #1	SEGT #2	SEGT #3	SEGT #1	SEGT #2	SEGT #3		
Active Alarm menu	E	r	r	E	x	x	Err	(xx code numbers) - See chart for Alarm Code definition
Last 10 Faults	F	1	0	E	x	x	F10	(xx code numbers) - See chart for Alarm Code definition
Code Release Number		C	r	None			Cr	Code number
Shared data Revision		S	r	None			Sr	Shared Data Number
Reset to Factory Default	r	F	d	yes, no			rFd	PCB will revert back to factory default if selected yes
Outdoor Setting Menu	0	d	S	AC1 / AC2 / HP1 / HP2 / OFF			OdS	OdS option is used to select outdoor unit type (1 or 2 stage)
Blower Speed for Continous Fan Mode	F	S	d	Fxx			FSd	(xx Blower Speed Number F01, F02..)
Single-Stage Cooling Fan Speed		A	C	Fxx			AC	(xx Blower Speed Number F01, F02..)
Low-stage Cooling Fan Speed, Two-Stage	A	C	1	Fxx			AC1	(xx Blower Speed Number F01, F02..)
High-stage Cooling Fan Speed, Two-Stage	A	C	2	Fxx			AC2	(xx Blower Speed Number F01, F02..)
Cool On Delay	C	n	d	Delay, Seconds			Cnd	Default set at 7 Secs, Adjustments can be made in 7 Secs increments from 0 to 35 Secs
Cool Off Delay	C	f	d	Delay, Seconds			Cfd	Default set at 65 Secs, Adjustments can be made in 5 Secs increments from 0 to 120 Secs
Gas Heat fan Speed	g	A	F	Fxx			gAF	(xx Blower Speed Number F01, F02..)
Gas Heat On Delay	g	n	d	Delay, Seconds			gnd	Default set at 30 Secs, Adjustments can be made in 5 Secs increments from 5 to 30 Secs
Gas heat Off Delay	g	F	d	Delay, Seconds			gFd	Default set at 90 Secs, Adjustments can be made in 30 Secs increments from 30 to 180 Secs
Single-Stage HP Heat Fan Speed		H	P	Fxx			HP	(xx Blower Speed Number F01, F02..)
Low-stage HP Heat Fan Speed, Two-Stage	H	P	1	Fxx			HP1	(xx Blower Speed Number F01, F02..)
High-stage HP Heat Fan Speed, Two-Stage	H	P	2	Fxx			HP2	(xx Blower Speed Number F01, F02..)
HP Heat off Delay	H	F	d	Delay, Seconds			HFd	Default set at 60 Secs, Adjustments can be made in 5 Secs increments from 30 to 120 Secs
HP Heat on Delay	H	n	d	Delay, Seconds			Hnd	Default set at 5 Secs, Adjustments can be made in 5 Secs increments from 5 to 30 Secs
Automatic Heat Staging - For Two Stage Control	A	H	S	no, 10, 20, 30, 60, AUt			AHS	Refer to Section " CHANGING HEATING MODE SETTING"
A2L Function Verification	A	2	u	Refer to the R-32 Section			A2u	
A2L Function Enabled	A	2	E	Refer to the R-32 Section			A2E	

Table 9

Control Board Status Menu

Description of System Status	Main Menu		
	SEGT #1	SEGT #2	SEGT #3
All segments illuminated = control powering up	8	8	8
Control in Idle stage	I	d	I
Constant Fan	F	A	n
Single-Stage Cooling Fan Speed		A	C
Low Stage Cooling	1	A	C
High Stage Cooling	2	A	C
Gas Heat		g	H
Low Stage HP	1	H	P
High Stage HP	2	H	P
Defrost	d	F	t

Table 10

Furnace operation

Purge gas lines of air prior to start-up. Do not purge lines into an enclosed burner compartment. Follow NFPA 54, National Fuel Gas Code 8.1 for proper purging methods. Check for leaks using an approved chloride-free soap and water solution, an electronic combustible gas detector, or other approved method.

NOTE: An interlock switch prevents furnace operation if the blower door is not in place. Keep the blower access doors in place except for inspection and maintenance.

R-32 FUNCTION

This furnace is equipped with a control board that is capable of shutting off the gas heat and turning on the blower fan in case of an R-32 refrigerant leak in the indoor evaporator coil. If the cooling unit that is paired with this furnace does not utilize R-32 as the refrigerant, the R-32 functionalities in the furnace control board will need to be turned off for the furnace to run properly.

R-32 function on the control board is ON by default. The R-32 function can be disabled through the furnace control by entering the A2L Function Enabled menu and selecting “no”. If A2L function is disabled, the furnace control will ignore all A2L functions. If A2L function is enabled, the control will monitor the R-32 sensor information.

To enter the A2L Function Enabled menu, press the left or right button until LED displays “A2E”. Press the center button and the LED will display the selected option (yes or no). Press the left or right button to select one of the two options and press the center button twice to select and confirm the option.

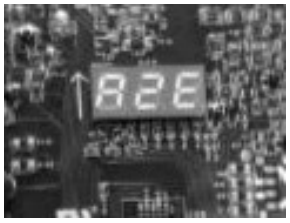

"A2E" selected
Figure 15

"Yes" selected
Figure 16

"No" selected
Figure 17

R-32 Sensor Wire Routing

NOTE: Wiring routing must not interfere with circulator blower operation, filter removal or routine maintenance. Wire should not be routed near hot surfaces and should be protected from sharp edges.

The R-32 Sensor wire coming from the indoor evaporator coil will need to be routed into the furnace and connected to the connection point on the furnace control board. This wire should be routed alongside the thermostat wires through the low voltage openings in the left or right side of the furnace blower compartment. Please see the electrical section for the location of the R-32 Sensor connection on the control board.

The R-32 function on the furnace control board may need to be enabled or disabled if any element of the installation changes from the original setup. The specific scenario will depend on each installation, so please refer to the evaporator coil's installation manual to verify what is required for your setup. For example, if the furnace was initially installed with an evaporator coil that utilized R-410A refrigerant, and the coil is later replaced with one that uses R-32 refrigerant, then R-32 function mode on the furnace control board must be enabled, and the R-32 sensor wire must be connected to the furnace control board.

Furnace Start-up

During furnace start up, the furnace control will identify the connected R-32 sensor and will start monitoring the sensor communication. A green LED located next to the sensor connection will indicate if there is communication between the furnace control and the R-32 sensor. The LED will be ON during the duration of the startup and then will either start blinking or turn OFF. The blinking LED signifies that communication with the R-32 sensor is present. The LED OFF signifies that there is no signal with the sensor.

If there are no alarms or faults, the furnace will go into regular run mode after a warm up period. The furnace control monitors the R-32 sensor once per second.

R-32 Refrigerant Leak

If the R-32 sensor on the indoor evaporator coil detects a specified concentration of R-32 refrigerant, the furnace will enter Mitigation Mode to dilute the refrigerant concentrations in case of a leak. In Mitigation Mode, the furnace will do the following:

1. Display the A2L Refrigerant Leakage error code (EAL).
2. Shut down the gas operation.
3. Energize the optional ventilation and alarm outputs.
4. Run the fan at max CFM airflow.

Once the R-32 sensor stops detecting a leak, the fan will continue to run for 5 minutes. After the 5 minutes, if there are no other alarms or faults, the control will de-energize the optional ventilation and alarm outputs and then go back to the original operating mode per the thermostat.

A2L Verification

The A2L Function Verification menu allows the installer to verify if the R-32 function operates properly. This menu simulates the refrigerant leak process and is only able to be used when there are no active alarms or faults. To verify the R-32 functions, enter the A2L Function Verification menu and select "YES". To enter the A2L Function Verification menu, press the left or right button until LED displays "A2u". Press the center button and the LED will display the selected option (yes or no). Press the left or right button to select one of the two options and press the center button to confirm the option. Once "YES" is selected, the furnace will do the following:

1. Display the A2L Refrigerant Leakage code (EAL).
2. Shut down the gas operation.
3. Energize the optional ventilation and alarm outputs.
4. Run the fan at max CFM airflow.

The control will exit the verification function if:

1. The 5 minute timeout expires or
2. An alarm or fault is detected or
3. The user turns OFF the A2L Function Verification.

NOTE: To verify gas heating operation shuts down, give furnace a call for heat before entering into A2L Function Verification.

Furnace Start-up

1. Close the manual gas shutoff valve external to the furnace.
2. Turn off the electrical power to the furnace.
3. Set the room thermostat to the lowest possible setting.
4. Remove the burner compartment door.

NOTE: This furnace is equipped with an ignition device which automatically lights the burner. Do not try to light the burner by hand.

5. *White-Rodgers valves:* Push the switch to the OFF position.
6. Wait five minutes then smell for gas. Be sure to check near the floor, as some types of gas are heavier than air.
7. If gas can be smelled following the five minute waiting period in Step 6, immediately follow the instructions on Page 3 of this manual. If you do not smell gas after five minutes:
   White-Rodgers valves: Push the switch to the ON position.
8. Replace the door on the front of the furnace.
9. Open the manual gas valve external to the furnace.
10. Turn on the electrical power supply to the furnace.
11. Adjust the thermostat to a setting above room temperature.
12. After the burners are lit, set the room thermostat to the desired temperature.

NOTE: There will be a delay between thermostat energizing and burner firing.

Furnace Shutdown

1. Set the thermostat to lowest setting. The integrated control will close the gas valve and extinguish flame. Following a 30 second delay, the induced draft blower will be de-energized. The circulation blower will shut down when the time delay expires. Time delay is selectable on all models.
2. Turn off the electrical power supply to the furnace.
3. Remove the burner compartment door.
4. *White-Rodgers valve:* Push switch to the OFF position.
5. Close manual gas shutoff valve external to the furnace.
6. Replace the door on the unit.

Gas Supply Pressure Measurement

CAUTION

To prevent unreliable operation or equipment damage, the inlet gas supply pressure must be as specified on the unit rating plate with all other household gas fired appliances operating.

The line pressure supplied to the gas valve must be within the range specified on Table 11. The supply pressure can be measured at the gas valve inlet pressure tap or at a hose fitting installed in the gas piping drip leg. The supply pressure must be measured with the unit OFF. To measure inlet pressure, use the following procedure.

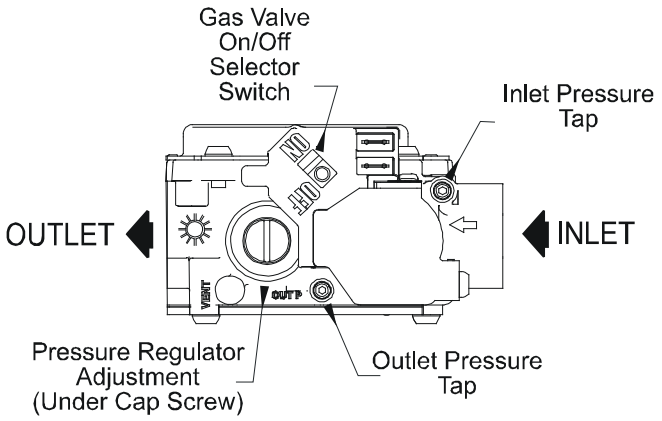

White-Rodgers Model 36J22Y-204

Figure 18

1. Turn OFF gas to furnace at the manual gas shutoff valve external to the furnace.
2. Turn OFF all electrical power to the system.
3. Inlet pressure tap connections:
   a. White-Rodgers valve: Back inlet pressure test screw (inlet pressure tap out one turn (counterclockwise, not more than one turn).
4. Connect calibrated manometer (or appropriate pressure gauge) at either the gas valve inlet pressure tap or the gas piping drip leg. See White-Rodgers 36J22Y-204 gas valve Figure 18 for location of inlet pressure tap.
5. Turn ON the gas supply.
6. Turn On power and operate the furnace and all other gas consuming appliances on the same gas supply line.
7. Using a leak detection solution or soap suds, check for leaks at screw (White-Rodgers valve). Bubbles forming indicate a leak. SHUT OFF GAS AND REPAIR ALL LEAKS IMMEDIATELY!
8. Measure the gas supply pressure with burners firing. Adjust supply pressure using the *Inlet Gas Supply Pressure* table shown below. If supply pressure reading differs from the table, make necessary adjustments to pressure regulator, gas piping size, etc., and/or consult with local gas utility.

INLET GAS SUPPLY PRESSURE		
Natural Gas	Minimum: 4.5" w.c.	Maximum: 10.0" w.c.

Table 11

9. Turn OFF all electrical power and gas supply to the system.
10. Remove the manometer hose from the hose barb fitting or inlet pressure tap.
11. Replace inlet pressure tap:

a. White-Rodgers valve: Turn inlet pressure test screw in to seal pressure port (clockwise, 7 in-lb minimum).

12. Retest for leaks. If bubbles form, shut down gas and repair leaks immediately.
13. If there are no leaks, turn ON electrical power and gas supply to the system.
14. Turn valve switch ON.

NOTE: If measuring gas pressure at the drip leg, a field-supplied hose barb fitting must be installed prior to making the hose connection. If using the inlet pressure Tap on the White-Rodgers gas valve, then use the 36G/J Valve Pressure Check Kit, Goodman Part No. 0151K00000S.

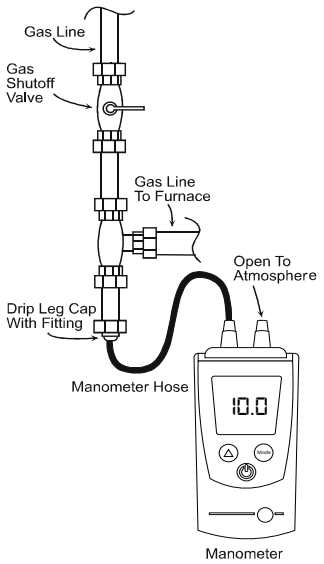

Measuring Inlet Gas Pressure (Alt. Method)
Figure 19

Gas Manifold Pressure Measurement and Adjustment

CAUTION

To prevent unreliable operation or equipment damage, the gas manifold pressure must be as specified on the unit rating plate. Only minor adjustments should be made by adjusting the gas valve pressure regulator.

Only small variations in gas pressure should be made by adjusting the gas valve pressure regulator. The manifold pressure must be measured with the burners operating. To measure and adjust the manifold pressure, use the following procedure.

1. Turn OFF gas to furnace at the manual gas shutoff valve external to the furnace.
2. Turn OFF all electrical power to the system.
3. Outlet pressure tap connections:
   a. White-Rodgers valve: Back outlet pressure test screw (outlet pressure Tap) out one turn (counterclockwise, not more than one turn).
4. Connect calibrated manometer (or appropriate pressure gauge) at the gas valve outlet pressure tap. See White-Rodgers 36J22Y-204 gas valve Figure 18 for location of outlet pressure tap.
5. Turn ON the gas supply.
6. Turn ON power and close thermostat “R” and “W” contacts to provide a call for heat.
7. Using a leak detection solution or soap suds, check for leaks at outlet pressure tap screw (White-Rodgers valve). Bubbles forming indicate a leak. SHUT OFF GAS AND REPAIR ALL LEAKS IMMEDIATELY!
8. Measure the gas manifold pressure with burners firing. Adjust manifold pressure using the following *Manifold Gas Pressure* table.

Manifold Gas Pressure	
Natural Gas	2.8" - 3.2" w.c.

Table 12

9. Remove regulator cover screw from the outlet pressure regulator and turn screw clockwise to increase pressure or counterclockwise to decrease pressure. Replace regulator cover screw.
10. Turn OFF all electrical power and gas supply to the system.
11. Remove the manometer hose from the hose barb fitting or outlet pressure tap.
12. Replace outlet pressure tap:
    a. White-Rodgers valve: Turn outlet pressure test screw in to seal pressure port (clockwise, 7 in-lb minimum).
13. Turn ON electrical power and gas supply to the system.
14. Close thermostat contacts to provide a call for heat.
15. Retest for leaks. If bubbles form, SHUT OFF GAS AND REPAIR ALL LEAKS IMMEDIATELY!

Gas Input Rate Measurement (Natural Gas Only)

The gas input rate to the furnace must never be greater than that specified on the unit rating plate. To measure natural gas input using the gas meter, use the following procedure.

1. Turn OFF the gas supply to all other gas-burning appliances except the furnace.
2. While the furnace is operating at high fire rate, time and record one complete revolution of the gas meter dial, measuring the smallest quantity, usually the dial that indicates ½ cu. ft. per revolution. You will use this number to calculate the quantity of gas in cubic ft. if the furnace would consume if it ran steadily for one hour (3600 seconds).
3. If the ½ cu. ft. dial was used, multiply your number X 2. **EXAMPLE:** If it took 23 seconds to complete one revolution of the ½ ft. dial (23 x 2 = 46).
   This tells us that at this rate, it would take 46 seconds to consume one cu. ft. of gas. This tells us that in one hour, the furnace would consume 78 cu. ft. of gas. (3600/46 = 78) The typical value range for 1 cu. ft. of natural gas is around 1025 BTU. Check with your gas utility, if possible. In this example, the furnace is consuming 80,000 BTUH.

NOTE: The final manifold pressure cannot vary by more than ± 0.2" w.c. for Natural gas from the specified setting. Consult your local gas supplier if additional input rate adjustment is required.

4. Turn ON gas and relight appliances turned off in step 1. Ensure all the appliances are functioning properly and that all pilot burners (if applicable) are operating.

Temperature Rise

Air temperature rise is the temperature difference between supply and return air. The proper amount of temperature rise is usually obtained when the unit is operated at the rated input with the "as shipped" blower speed. If the correct amount of temperature rise is not obtained, it may be necessary to change the blower speed.

Temperature rise must be within the range specified on the unit rating plate. An incorrect temperature rise may result in condensing in or overheating of the heat exchanger. An airflow and temperature rise table is provided in the Specification Sheet applicable to your model. Determine and adjust temperature rise as follows:

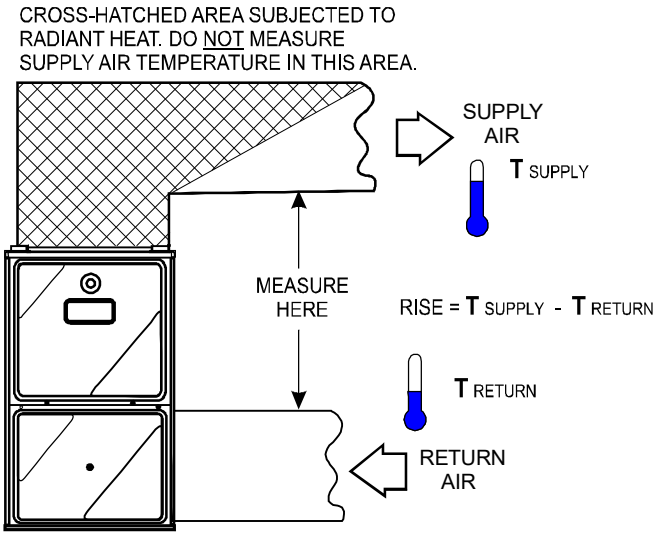

Temperature Rise Measurement
Figure 20

1. Operate furnace with burners firing approximately 15 minutes. Ensure all registers are open and all duct dampers are in their final (fully or partially open) position.
2. Place thermometers in the return and supply ducts as close to the furnace as possible. Thermometers must not be influenced by radiant heat by being able to "see" the heat exchanger.
3. Subtract the return air temperature from the supply air temperature to determine the air temperature rise. Allow adequate time for thermometer readings to stabilize.
4. Adjust temperature rise by adjusting the circulator blower speed. Increase blower speed to reduce temperature rise. Decrease blower speed to increase temperature rise. Refer to the following section for speed changing details.

Circulator Blower Speed Adjustment

This furnace is equipped with a multi-speed circulator blower. This blower provides ease in adjusting blower speeds. The Specification Sheet applicable to your model provides an airflow table, showing the relationship between airflow (CFM) and external static pressure (E.S.P.), for the proper selection of heating and cooling speeds.

1. Determine the tonnage of the cooling system installed with the furnace. If the cooling capacity is in BTU/hr divide it by 12,000 to convert capacity to tons.
   Example: Cooling Capacity of 30,000 BTU/hr.
   30,000/12,000 = 2.5 Tons
2. Determine the proper air flow for the cooling system. Most cooling systems are designed to work with air volume between 350 and 450 CFM per ton. Most manufacturers recommend an air flow of about 400 CFM per ton.
   Example: 2.5 tons X 400 CFM per ton = 1000 CFM
3. Select the heating speed for your model from the heating speed chart in the Specification Sheet. The selected speed must provide a temperature rise within the rise range listed with the particular model.

Continuous Fan Mode Speed Selection

To change the main blower speed in circulation mode, see the following steps:

1. Press the left or right button until LED displays "FSd". Press the center button and LED will display the currently selected speed number as Fxx (xx: Blower speed number from 1 to 9).
2. The control shall cycle through available fan speeds every time the left or right button is pressed. All 9 speeds are available for circulation.
3. When the center button is pressed, the current displayed speed shall stop flashing. Press the center button again to select the option and the control shall immediately apply that blower setting and return to the corresponding main menu.

THERMOSTAT CALL	AVAILABLE SPEEDS (FSd menu)
G	F01
	F02
	F03
	F04
	F05
	F06
	F07
	F08
	F09

Circulation Speed Table
Table 13

Cooling Mode Speed Selection

To change the main blower speed in COOLING mode, follow the following steps:

NOTE: If Heat Pump system is configured in OdS menu (HP1 or HP2) COOLING thermostat calls will include "Y1"/Y2" + "O" terminals energized.

1. Press the left or right button until LED displays "AC1" (for single stage COOLING) or "AC2" (for Two stage COOLING). Press the center button and the LED will display the currently selected speed number as Fxx (xx: Blower speed number from 1 to 9).
2. The control shall cycle through available fan speeds every time the left or right button is pressed. All 9 speeds are available for both Single and Two Stage cooling.
3. When the center button is pressed, the current displayed speed shall stop flashing. Press the center button again to select the option and the control shall immediately apply that blower setting and return to the corresponding main menu.

THERMOSTAT CALL (OdS: Terminal)	AVAILABLE SPEEDS (AC1 menu)
1AC: Y1 1HP: Y1 + O	F01
	F02
	F03
	F04
	F05
	F06
	F07
	F08
	F09

Single Stage Cooling Speed Table
Table 14

THERMOSTAT CALL (OdS: Terminal)	AVAILABLE SPEEDS (AC2 menu)
2AC: Y1 + Y2 2HP: Y1 + Y2 + O	F01
	F02
	F03
	F04
	F05
	F06
	F07
	F08
	F09

Two Stage Cooling Speed Table
Table 15

Gas Heating Mode Speed Selection

To change the main blower speed in GAS HEATING mode, see the following steps:

1. Press the left or right button until LED displays "gAF". Press the center button and LED will display the currently selected fan speed as Fxx (xx: Blower speed number).
2. The control shall cycle through available speed number every time the left or right button is pressed.
3. When the center button is pressed, the current displayed speed shall stop flashing. Press the center button again to select the option and the control shall immediately apply that blower setting and return to the corresponding main menu.

NOTE: Each furnace model contains different allowable gas heating speeds. Allowable gas heating speeds will be visible within gAF fan speed menu.

Heat Pump Heating Mode Speed Selection

To change the main blower speed in Heat Pump HEATING mode, follow the following steps:

1. Press the left or right button until LED displays "HP1" (for single stage HP HEATING) or "HP2" (for Two stage HP HEATING). Press the center button and the LED will display the currently selected speed number as Fxx (xx: Blower speed number from 1 to 9).
2. The control shall cycle through available fan speeds every time the left or right button is pressed. All 9 speeds are available for both Single and Two Stage HP HEATING.
3. When the center button is pressed twice, the current displayed speed shall be selected, and control shall apply the newly selected speed in next HP HEATING call.

THERMOSTAT CALL (OdS: Terminal)	AVAILABLE SPEEDS (HP1 menu)
1HP: Y1	F01
	F02
	F03
	F04
	F05
	F06
	F07
	F08
	F09

Single Stage HP Heating Speed Table
Table 16

THERMOSTAT CALL (OdS: Terminal)	AVAILABLE SPEEDS (HP2 menu)
2HP: Y1 + Y2	F01
	F02
	F03
	F04
	F05
	F06
	F07
	F08
	F09

Two Stage HP Heating Speed Table
Table 17

Circulator Blower Fan Timing Adjustment

NOTE: Items in this section refer to the air circulator blower fan, NOT to the induced draft blower. The induced draft blower timing sequence is not adjustable.

The integrated control module on all models provides selectable fan on/off delay adjustments.

On/Off Fan Delay Selection

To change the fan on or off delay for COOLING, HP HEATING & GAS HEATING modes, see the following steps:

1. Press the left or right button until LED displays the desired on/off setting (See MAIN MENU section for selectable blower on/off delay options). Press the center button and LED will display the selected on/off delay time in seconds.
2. The control shall cycle through available on/off delay times every time the left or right button is pressed.
3. When the center button is pressed, the current displayed on/off delay shall stop flashing. Press the center button again to select the option and the control shall immediately apply that delay setting and return to the corresponding main menu.

OPERATIONAL CHECKS

WARNING

To avoid personal injury or death, do not remove any internal compartment covers or attempt any adjustment. Electrical components are contained in both compartments. Contact a qualified service agent at once if an abnormal operation should develop.

Checking Duct Static

Refer to your furnace rating plate for the maximum ESP (external duct static) rating.

Total external static refers to everything external to the furnace cabinet. Cooling coils, filters, ducts, grilles, registers must all be considered when reading your total external static pressure. The supply duct pressure must be read between the furnace and the cooling coil. This reading is usually taken by removing the “A” shaped block off plate from the end on the coil; drilling a test hole in it and reinstalling the block off plate. Take a duct static reading at the test hole. Tape up the test hole after your test is complete. The negative pressure must be read between the filter and the furnace blower.

Too much external static pressure will result in insufficient air that can cause excessive temperature rise. This can cause limit switch tripping and heat exchanger failure.
To determine total external duct static pressure, proceed as follows:

1. With clean filters in the furnace, use a manometer to measure the static pressure of the return duct at the inlet of the furnace. (Negative Pressure)
2. Measure the static pressure of the supply duct. (Positive Pressure)
3. The difference between the two numbers is the total external duct static pressure.

EXAMPLE:
static reading from return duct = -.1” w.c.
static reading from supply duct = .3” w.c.
total external static pressure on this system = .4” w.c.

NOTE: Both readings may be taken simultaneously and read directly on the manometer if so desired. If an air conditioner coil or Electronic Air Cleaner is used in conjunction with the furnace, the readings must also include theses components, as shown in the following drawing.

4. Consult proper tables for the quantity of air.

If the total external static pressure exceeds the maximum listed on the furnace rating plate, check for closed dampers, registers, undersized and/or oversized poorly laid out duct work. The temperature rise of the furnace must be within the temperature rise range listed on the furnace rating plate.

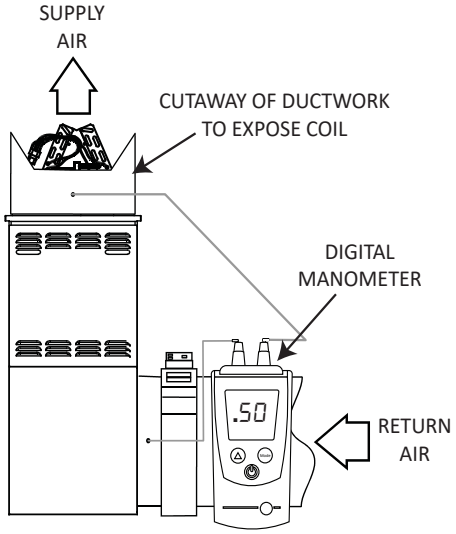

Checking Static Pressure (80% Furnace Shown)
Figure 21

SAFETY CIRCUIT DESCRIPTION

General

WARNING

To avoid personal injury or death, do not remove any internal compartment covers or attempt any adjustment. Electrical components are contained in both compartments. Contact a qualified service agent at once if an abnormal operation should develop.

WARNING

Do not bypass safety devices.

A number of safety circuits are employed to ensure safe and proper furnace operation. These circuits serve to control any potential safety hazards and serve as inputs in the monitoring and diagnosis of abnormal function. These circuits are continuously monitored during furnace operation by the integrated control module.

Integrated Control Module

The integrated control module is an electronic device which controls all furnace operations. Responding to the thermostat, the module initiates and controls normal furnace operation, and monitors and addresses all safety circuits. If a potential safety concern is detected, the module will take the necessary precautions and provide diagnostic information through an LED.

Primary Limit

The primary limit control is located on the partition panel and monitors heat exchanger compartment temperatures. It is a normally closed (electrically), automatic reset, temperature activated sensor. The limit guards against the overheating resulting from insufficient air passing over the heat exchanger.

Auxiliary Limit

The auxiliary limit control is located either on or near the circulator blower and monitors heat exchanger compartment temperatures. The control is a normally closed (electrically), automatic reset, temperature activated sensor. It guards against overheating resulting from insufficient air passing over the heat exchanger. The auxiliary limit control is suitable for both horizontal right and horizontal left installations. Regardless of airflow direction, it does not need to be relocated.

Burner Temperature Switch

The burner temperature switch is mounted on the burner assembly to monitor the burner box temperature. It is normally closed (electrically), auto-reset sensor. This switch guards against the burner flames not being properly drawn into the heat exchanger.

Pressure Sensor

The pressure sensor is mounted near induced draft blower. Its function is to regulate the induced draft blower's speed in order to maintain proper air-fuel ratio for clean and reliable combustion. The pressure sensor also guards against insufficient airflow (combustion air and flue products) through the heat exchanger.

Flame Sensor

The flame sensor is a probe mounted near the burner assembly which uses the principle of flame rectification to determine the presence or absence of flame.

TROUBLESHOOTING

Diagnostic Chart

Refer to the troubleshooting chart in the Appendix for assistance in determining the source of unit operational problems. The 3 digit diagnostic display provides alarm codes to assist in troubleshooting the unit.

Fault Code Retrieval

The ignition control is equipped with push buttons that can be used to view the last ten faults detected by the control. Press the left or right button until LED displays "F10". Press the center button and LED will display the last fault code. Continue pressing the center button to display the previous fault codes.

Clear Fault Memory

To clear all fault codes, press the left or right button until LED displays "F10". Press and hold the center button for 5 to 30 seconds.

Resetting From Lockout

Furnace lockout results when a furnace is unable to achieve ignition after three attempts. It is characterized by a non-functioning furnace and a fault code will be displayed. If the furnace is in "lockout", it will (or can be) reset in any of the following ways.

1. Automatic reset. The integrated control module will automatically reset itself and attempt to resume normal operations following a one hour lockout period.
2. Manual power interruption. Interrupt 120 volt power to the furnace.

NOTE: If the condition which originally caused the lockout still exists, the control will return to lockout. Refer to the Diagnostic Chart for aid in determining the cause.

MAINTENANCE

WARNING

To avoid electrical shock, injury or death, disconnect electrical power before performing any service or maintenance. Only a qualified servicer should service or perform maintenance.

Annual inspection

The furnace should be inspected by a qualified installer, or service agency at least once per year. This check should be performed at the beginning of the heating season. This will ensure that all furnace components are in proper working order and that the heating system functions appropriately. Pay particular attention to the following items. Repair or service as necessary.

- Flue pipe system: Check for blockage and/or leakage. Check the outside termination and the connections at and internal to the furnace.
- Heat exchanger: Check for corrosion and/or buildup within the heat exchanger passageways.
- Burners: Check for proper ignition, and flame sense.
- Wiring: Check electrical connections for tightness and/or corrosion. Check wires for damage.
- Filters: Check filters and determine if any need to be replaced.
- R-32 Sensor Wire: Check R-32 sensor wire connection for tightness and check wire for damage.

Filters

WARNING

To avoid property damage, personal injury or death, disconnect electrical power before removing filters. Never operate furnace without a filter installed because dust and lint will build up on internal parts resulting in loss of efficiency, equipment damage and possible fire.

A return air filter is not supplied with this furnace; however, there must be a means of filtering all of the return air. The installer will supply filter(s) at the time of installation.

Induced Draft and Circulator Blower Motors

The bearings in the induced draft blower and circulator blower motors are permanently lubricated by the manufacturer. No further lubrication is required. Check motor windings for accumulation of dust which may cause overheating. Clean as necessary.

Flame Sensor (Qualified Servicer Only)

Under some conditions, the fuel or air supply can create a nearly invisible coating on the flame sensor. This coating acts as an insulator causing a drop in the flame sense signal. If the flame sense signal drops too low the furnace will not sense flame and will lock out. The flame sensor should be carefully cleaned by a qualified servicer using steel wool. The flame sense signal should be 1 to 8 microamps.

Igniter (Qualified Servicer Only)

At room temperature, the igniter ohm reading should be from 20 - 100 ohms.

Burner

WARNING

To prevent personal injury or death, do not remove any internal compartment covers or attempt any adjustment. Electrical components are contained in both compartments. Contact a qualified service agent at once if an abnormal operation should develop.

The Ultra low NOx furnace uses a premix burner. The burner box is sealed to achieve safe and reliable operation.

CLEANING (QUALIFIED SERVICER ONLY)

1. Shut off electric power and gas supply to the furnace.
2. Disconnect the burner box limit wires, flame sensor wire, and disconnect the igniter plug.

CAUTION

Label all wires prior to disconnection when servicing controls. Wiring errors can cause improper and dangerous operation. Verify proper operation after servicing.

3. Do not remove burner or other components.
4. Clean cabinet and around the inducer blower, motor and burner box.
5. Reconnect wiring.
6. Turn on electric power and gas supply to the furnace.
7. Check furnace for proper operation. Refer to *“Operational Checks”* section to verify burner flame characteristics.

BEFORE LEAVING AN INSTALLATION

- Cycle the heating, cooling and fan only operations to verify each operation is working properly.
- Review the Owner’s Manual with the homeowner and discuss proper furnace operation and maintenance.
- Leave literature packet near furnace.

REPAIR AND REPLACEMENT PARTS

- When ordering any of the listed functional parts, be sure to provide the furnace model, manufacturing, and serial numbers with the order.
- Although only functional parts are shown in the parts list, all sheet metal parts, doors, etc. may be ordered by description.
- Parts are available from your distributor.

Functional Parts List-

Gas Valve	Blower/Collector Box Gasket
Natural Gas Orifice	Primary Limit Switch
Burner Assembly	Burner Temperature Switch
Hot Surface Igniter	Auxiliary Limit
Flame Sensor	Heat Exchanger
Gas Manifold	Door Switch
Ignition Control	Transformer
Blower Mounting Bracket	Blower Wheel
Pressure Sensor	Blower Housing
Pressure Sensor Hose	Blower Cutoff
Induced Draft Blower	Blower Motor
Integrated Control Module	Motor Mount Bracket
Burner Box Gasket	

COMPONENT ID

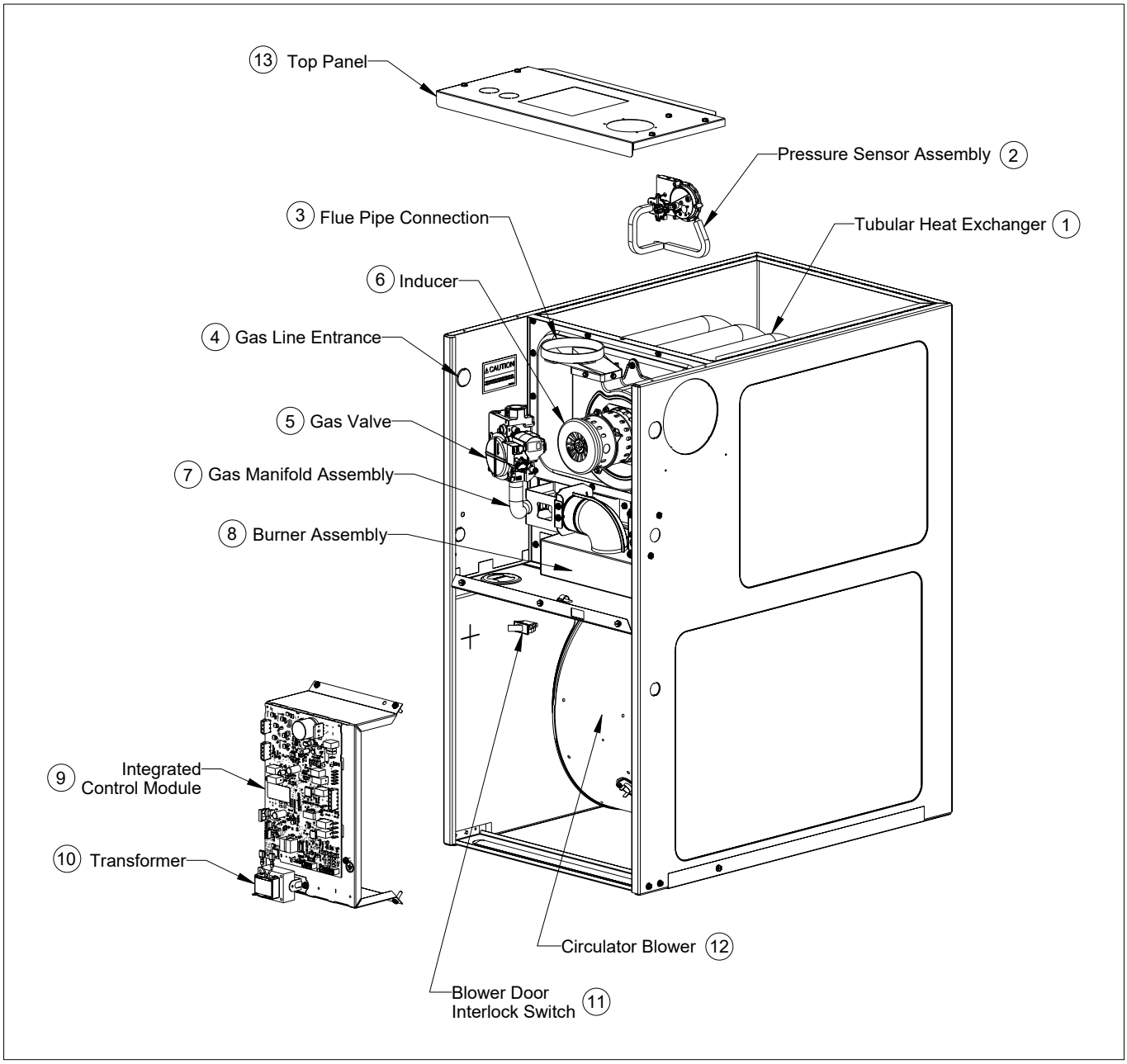

TROUBLESHOOTING CHART

LED Status	Fault Description	Possible Causes	Corrective Action(s)
IdL	Idle	• Normal operation.	• None
nonE	No 120VAC power to furnace or no 24 volt power to integrated control module.	• Blown fuse or tripped circuit breaker. • Manual disconnect switch turned OFF, door switch open or 24 volt wire improperly connected or loose. • Furnace electrical supply shared with other devices. • Integrated control module is non-functional.	• Check furnace breaker to see if it has tripped. Reset breaker if tripped. • Check 120VAC power to furnace, primary side of the 24 volt transformer and integrated control module. • Check for possible shorts in 120VAC circuit. Repair as necessary. • If transformer has 120VAC on the primary side, confirm transformer has 24 volts on the secondary side. • Verify 24 volt wires from the transformer to the furnace control board are not damaged and are properly connected to the 12-pin harness. Make repairs or wiring corrections if needed. • If all wiring connections have been verified, replace the furnace control board.
EbL	Circulator blower motor is consuming very little current after heat ON delay - below expected value.	• Loose wiring connections to and from the blower motor. • Circulator blower motor 120 volt L1 wire is not plugged into the CIRC-H connection on the integrated control board. • Heating blower speed not set correctly. • Circulator blower motor failure.	• Check for loose wiring connections to and from the circulator blower motor. • Verify 120 volt L1 wire from blower motor is plugged into the CIRC-H connection on the integrated control board. • Verify blower voltage, amps and proper speed setting. Replace blower motor if necessary.
EbU	Circulator blower motor is consuming too much current during inducer pre-purge is higher than expected value.	• Circulator blower motor power wiring reversed on integrated control board.	• Check for loose wiring connections to and from the circulator blower motor. • Check for miswired connections on the integrated control board.
Ed0	No Shared data.	• No Shared data.	• Populate shared data set using BTPIM01.
Ed8	Invalid Call (check ODS setting)	• ODS setting does not match outdoor unit.	• Setup ODS to match outdoor unit. • Setup TON airflow to match outdoor unit.
EE0	Furnace lockout due to excessive number of ignition "retries" (3 total). Failure to establish flame. Loss of flame after establishment.	• No gas or improper gas pressure to burners. • Bad igniter or igniter alignment. • Orifices restricted. • Coated/oxidized or improperly connected flame sensor. • Restriction in flue and/or lack of combustion air. • Improper induced draft blower performance.	• Locate and correct gas interruption. • Replace or realign igniter. • Check flame sense signal. Clean sensor if coated and/or oxidized. • Check flue piping for blockage, proper length, elbows and termination. • Verify proper induced draft blower performance.
EE1	Pressure switch circuit closed at start of heating cycle.	• Pressure switch contacts sticking. • Short in pressure switch circuit wiring.	• Replace pressure switch. • Repair short in wiring.
EE2	Pressure switch circuit open.	• Pressure switch hose blocked, pinched, or connected improperly. • Blocked flue pipe, or weak induced draft blower. • Incorrect pressure switch set point or malfunctioning switch contacts. • Loose or improperly connected wiring.	• Inspect pressure switch hose. Repair/replace if necessary. • Inspect flue piping for blockage, proper length, elbows and termination. Correct as necessary. • Check induced draft blower performance. Correct as necessary. • Check pressure switch operation. Replace as needed. • Tighten or correct wiring connections.
EE3	Primary limit circuit open.	• Insufficient conditioned air over the heat exchanger. • Blocked filters, restrictive ductwork. • Inproper circulator blower speed or failed circulator blower motor. • Loose or improperly connected wiring in high limit circuit.	• Check filters and ductwork for blockage. Clean filters or remove obstruction. • Check circulator blower speed and performance. Correct speed or replace blower motor if necessary. • Tighten or correct wiring connections.
EE4	Flame sensed with no call for heat.	• Short to ground in flame sense circuit. • Lingering burner flame. • Slow closing gas valve.	• Correct short at flame sensor or in flame sensor wiring. • Check for lingering flame. • Verify proper operation of gas valve.

TROUBLESHOOTING CHART

LED Status	Fault Description	Possible Causes	Corrective Action(s)
EE5	Open fuse.	• Blown fuse • Short in low voltage wiring • Back of control board is touching mounting panel because standoffs are missing.	• Replace fuse • Locate and correct short in low voltage wiring. • Replace the missing standoffs.
EE6	Flame sense micro amp signal is low.	• Flame sensor is coated/oxidized. • Flame sensor incorrectly positioned in burner flame. • Lazy burner flame due to improper gas pressure or combustion air.	• Clean flame sensor if coated or oxidized. • Inspect flame sensor for proper alignment. • Compare current gas pressure to rating plate and adjust as needed.
EE7	Problem with ignitor circuit.	• Improperly connected ignitor. • Shorted ignitor. • Poor furnace ground. • Ignitor relay fault on integrated control module.	• Check and correct wiring from integrated control board to ignitor. • Diagnose and replace shorted ignitor as needed. • Verify and correct furnace ground wiring. • Check ignitor output from control. Replace if necessary.
E10	Grounding fault	• Poor neutral connection.	• Verify neutral wire connection to furnace and continuity to ground source.
E11	Open burner box limit switch circuit.	• Gas pressure too high. • Burners mis-aligned. • Restricted heat exchanger or venting.	• Check and correct gas pressure. • Check and correct burner alignment. • Check and correct restriction.
E12	Redundant relay open alarm.		• Replace integrated control board. • Do not replace additional components based on this error code.
E13	Redundant relay stuck closed alarm.		• Replace integrated control board. • Do not replace additional components based on this error code. NOTE: If E13 error code is still active after replacing control board, replace the system wire harness.
E1b	Analog Pressure Sensor reference error.	• 5VDC reference voltage out of range (5.0 +/- 0.2 VDC for 5 seconds).	• Check Red, Black, White harness and connections to the inducer and integrated control board. • Replace pressure sensor.
E1C	Analog Pressure Sensor null error.	• Pressure Sensor voltage out of range when inducer is off.	• Check Red, Black, White harness and connections to the inducer and integrated control board. • Check pressure hoses to pressure sensor and pressure switch.
E1d	Analog Pressure Sensor span error.	• Pressure sensor out of range when pressure switch is closed. • Pressure switch opens and closes outside of expected pressure sensor range.	• Check Red, Black, White harness and connections to the inducer and integrated control board. • Check pressure hoses to pressure sensor and pressure switch. • Replace pressure switch if error continues.
E1E	Analog Pressure Sensor pressure error.	• Inducer RPM has reached its limit. • Blocked flue pipe.	• Check Red, Black, White harness and connections to the inducer and integrated control board. • Check flue piping for blockage, proper length, elbows and termination. • Replace pressure sensor if necessary.
E1F	Analog Pressure Sensor input error.	• Wrong pressure sensor installed.	• Check Red, Black, White harness and connections to the inducer and integrated control board. • Replace pressure sensor.
EbF	Inducer communication alarm	• Loose wiring connections from the integrated control board to the inducer.	• Check Red, Black, White harness and connections to the inducer and integrated control board.
EEA	Polarity of 120 volt AC is reversed.	• Polarity of 120 volt AC power to furnace or integrated control module is reversed. • Poor furnace ground.	• Review wiring diagram to correct polarity. • Verify proper ground. Correct if necessary. • Check and correct wiring.
EEb	Integrated Control Board is not energizing the gas valve when it should be on.	• Miswired gas valve circuit. • Open gas valve circuit. • Gas valve relay on integrated control board stuck open.	• Check wiring in gas valve circuit. • Replace integrated control board. • Do NOT replace the gas valve.

TROUBLESHOOTING CHART

LED Status	Fault Description	Possible Causes	Corrective Action(s)
EEC	Gas valve is energized when it should be off.	• Miswired gas valve circuit. • Shorted gas valve wiring.	• Cycle 120VAC power to the furnace control. If EEC error code is still active, turn off power to the furnace and continue diagnosis. NOTE: This error code is a wiring issue external to the furnace control board. • Inspect system wiring for damage and repair if needed. • If EEC error code is still active, replace system wiring harness. NOTE: After replacing system wire harness, if EEC is still active, replace integrated control board.
EEd	Auxiliary limit switch open (blower compartment).	• 120 volt power supply was shut off during heat cycle. • Insufficient conditioned air over the heat exchanger. Blocked filters, restrictive ductwork, improper circulator blower speed or failed circulator blower motor. • Loose or improperly connected wiring in high limit circuit.	• Check filters and ductwork for blockage. Clean filters or remove obstruction. • Check circulator blower speed and performance. Correct speed or replace blower motor if necessary. • Tighten or correct wiring connections.
EEE	Furnace control board has detected an internal fault.	• 120VAC power wiring loose or damaged. • Poor ground wire. • Damaged or miswired 120V or 24V wiring on the furnace.	• Turn off power to the furnace for at least 3 minutes, then turn power back on (to see if the EEE code will reset). • Inspect 120V and 24V wiring to the furnace and on the furnace for signs of damage or miswiring. • Replace integrated control board. • Do not replace additional components based on this error code.
EEH	Error with Twinning function.	• Both furnaces not on the same 120VAC power from the breaker panel. • Low voltage wiring error or loose wiring connections.	• Verify both furnaces are on the same 120VAC power from the breaker panel. • Turn off power to both furnaces. Disconnect the twinning wire between the two furnace control boards. Turn power back on to both furnaces. • Confirm both furnaces are powered and the furnace control boards do not have any active error codes. If one of the controls displays the EEH, (without the twinning wire) replace only that control board. 3) Turn power off to both furnaces again. Re-connect the twinning wires between both furnace control boards. Verify the twinning wire is properly connected and not damaged. Replace the wire if necessary. Turn power back on to both furnaces. 4) Confirm thermostat wiring is correct per the installation manual. Provide a G (Fan Only) signal to the main furnace control. Check if the twinned furnace starts running the blower at the same speed as the main furnace. 5) If the twinned furnace is not operating the fan and the EEH fault is still active, Replace one of the furnace control boards. If EEH is still active, replace the second furnace control board.
EAF	Furnace has lost communication with the R-32 sensor and the furnace is in mitigation mode.	Furnace may not be paired with R-32 Cooling Unit. Refer to the R-32 Information Section. • Loose or damaged R-32 sensor wire.	• Verify wire connection to R-32 sensor is not loose. • Verify the R-32 sensor wire is not damaged. • Replace R-32 sensor if necessary.
EAL	R-32 sensor has detected a refrigerant leak and furnace is in mitigation mode.		• Investigate the indoor coil for a refrigerant leak. • Furnace will resume normal operation once a leak is not detected and the 5 minute delay period is over.
EAS	R-32 sensor has detected a fault and furnace is in mitigation mode.		• Investigate the R-32 sensor. • Replace the R-32 sensor if necessary.
EAr	The furnace control board has detected an issue with the internal A2L relay and is running mitigation mode.		• Disconnect any wire connected to the ALARM terminal of the furnace control. • Cycle power to the furnace. If the error code clears, there is an issue with the wiring connected to the ALARM terminal. Repair wiring if necessary. • If the error code does not clear, replace the integrated control board.

BLOWER PERFORMANCE DATA

*R9S80-U COOLING & CIRCULATION AIRFLOW														
MODEL	THERMOSTAT CALL	TAP #	EXTERNAL STATIC PRESSURE (INCHES OF WATER COLUMN)											
			0.10	0.20	0.30	0.40	0.50		0.60		0.70		0.80	
			CFM	CFM	CFM	CFM	CFM	WATTS	CFM	WATTS	CFM	WATTS	CFM	WATTS
R9S800403AU	Y1/Y2/G	F01	590	540	483	429	369	72	311	78	247	84	203	89
		F02	690	643	597	547	498	90	443	96	389	102	343	109
		F03	750	702	660	618	572	104	525	110	477	116	421	124
		F04	876	832	794	758	716	138	678	146	641	152	598	157
		F05^	927	881	841	806	771	155	734	161	698	168	662	174
		F06	1058	1015	976	945	915	202	881	210	849	218	818	226
		F07	1116	1071	1036	1003	975	230	943	236	919	245	884	252
		F08^^	1238	1192	1158	1124	1098	291	1070	299	1044	308	1016	318
		F09	1398	1357	1320	1293	1269	396	1239	405	1216	411	1194	416
R9S800603AU	Y1/Y2/G	F01	587	542	490	437	382	75	318	82	266	88	207	93
		F02	685	638	590	543	498	92	448	98	392	105	339	112
		F03	856	814	774	732	693	136	657	142	622	148	581	154
		F04^	937	892	855	819	786	163	752	170	715	177	684	184
		F05	1060	1017	981	950	921	212	886	219	856	227	828	234
		F06^^	1108	1068	1033	1003	972	234	942	243	914	250	882	259
		F07	1274	1233	1203	1174	1146	327	1118	337	1089	345	1065	353
		F08	1374	1340	1306	1278	1254	399	1227	411	1201	414	1179	421
		F09	1437	1395	1362	1332	1305	473	1278	482	1253	492	1228	502
R9S800604BU	Y1/Y2/G	F01	836	774	711	655	596	108	523	116	456	124	397	130
		F02	1274	1228	1188	1147	1107	248	1064	256	1027	266	990	276
		F03	1295	1256	1214	1181	1140	260	1100	269	1062	279	1024	287
		F04	1385	1337	1301	1260	1222	298	1186	308	1149	315	1114	326
		F05	1454	1407	1372	1353	1325	349	1291	360	1255	370	1219	379
		F06^	1528	1485	1438	1409	1383	382	1349	391	1317	402	1285	412
		F07	1619	1579	1551	1523	1495	444	1463	454	1430	464	1402	476
		F08^^	1746	1697	1667	1642	1617	534	1593	545	1570	559	1540	571
		F09	1772	1735	1698	1674	1645	559	1622	571	1598	584	1574	597
R9S800804BU	Y1/Y2/G	F01	722	658	599	534	458	88	386	94	330	99	268	105
		F02	1270	1223	1179	1139	1105	250	1066	259	1029	267	996	277
		F03	1304	1254	1212	1173	1135	264	1104	273	1069	282	1032	290
		F04	1367	1318	1277	1236	1199	296	1169	306	1135	315	1102	327
		F05^	1473	1429	1386	1355	1320	354	1289	365	1258	372	1224	383
		F06	1560	1518	1476	1441	1409	409	1382	422	1350	429	1321	439
		F07	1647	1605	1562	1531	1497	460	1467	471	1440	481	1408	492
		F08^^	1720	1710	1674	1642	1611	544	1581	558	1553	565	1527	579
		F09	1796	1759	1721	1687	1655	582	1628	595	1604	607	1578	619
R9S800805CU	Y1/Y2/G	F01	1280	1228	1178	1134	1086	204	1036	214	986	226	936	236
		F02	1401	1356	1313	1273	1234	252	1190	262	1145	270	1099	282
		F03	1593	1550	1512	1475	1436	332	1399	341	1360	354	1319	364
		F04	1706	1662	1621	1586	1550	383	1515	395	1479	407	1444	414
		F05^	1821	1775	1736	1703	1669	443	1636	455	1605	468	1576	480
		F06	1836	1793	1757	1721	1689	459	1659	472	1628	486	1592	497
		F07	1932	1888	1855	1825	1794	517	1762	532	1733	545	1701	560
		F08^^	2184	2143	2110	2072	2048	706	2017	724	1989	741	1959	756
		F09	2221	2178	2145	2109	2082	731	2053	747	2025	764	1992	780

***Models**
^ Default Y1 speed
^^ Default Y2 speed

BLOWER PERFORMANCE DATA

*R9S80-U HEATING AIRFLOW

MODEL	THERMOSTAT CALL	TAP #	EXTERNAL STATIC PRESSURE (INCHES OF WATER COLUMN)													TEMP RANGE
			0.10		0.20		0.30		0.40		0.50		0.60	0.70	0.80	
			CFM	RISE	CFM	RISE	CFM	RISE	CFM	RISE	CFM	RISE	CFM	CFM	CFM	
R9S800403AU	W/W1	F02	690	42	643	46	597	49	547	53	498	55	443	389	343	25 - 55
		F03^	750	39	702	42	660	45	618	48	572	52	525	477	421	
		F04	876	34	832	36	794	37	758	39	716	41	678	641	598	
		F05	927	32	881	34	841	35	806	37	771	38	734	698	662	
		F06	1058	28	1015	29	976	30	945	31	915	32	881	849	818	
		F07	1116	27	1071	28	1036	29	1003	30	975	30	943	919	884	
R9S800603AU	W/W1	F05	1060	42	1017	44	981	45	950	47	921	48	886	856	828	20 - 50
		F06	1108	40	1068	42	1033	43	1003	44	972	46	942	914	882	
		F07^	1274	35	1233	36	1203	37	1174	38	1146	39	1118	1089	1065	
R9S800604BU	W/W1	F02	1274	35	1228	36	1188	37	1147	39	1107	40	1064	1027	990	20 - 50
		F03	1295	34	1256	35	1214	37	1181	38	1140	39	1100	1062	1024	
		F04^	1385	32	1337	33	1301	34	1260	35	1222	36	1186	1149	1114	
		F05	1454	31	1407	32	1372	32	1353	33	1325	34	1291	1255	1219	
R9S800804BU	W/W1	F02^	1270	47	1223	48	1179	50	1139	52	1105	54	1066	1029	996	35 - 65
		F03	1304	45	1254	47	1212	49	1173	51	1135	52	1104	1069	1032	
		F04	1367	43	1318	45	1277	46	1236	48	1199	49	1169	1135	1102	
R9S800805CU	W/W1	F01	1280	46	1228	48	1178	50	1134	52	1086	55	1036	986	936	35 - 65
		F02^	1401	42	1356	44	1313	45	1273	47	1234	48	1190	1145	1099	

^ Default Heat Speed

WIRING DIAGRAM

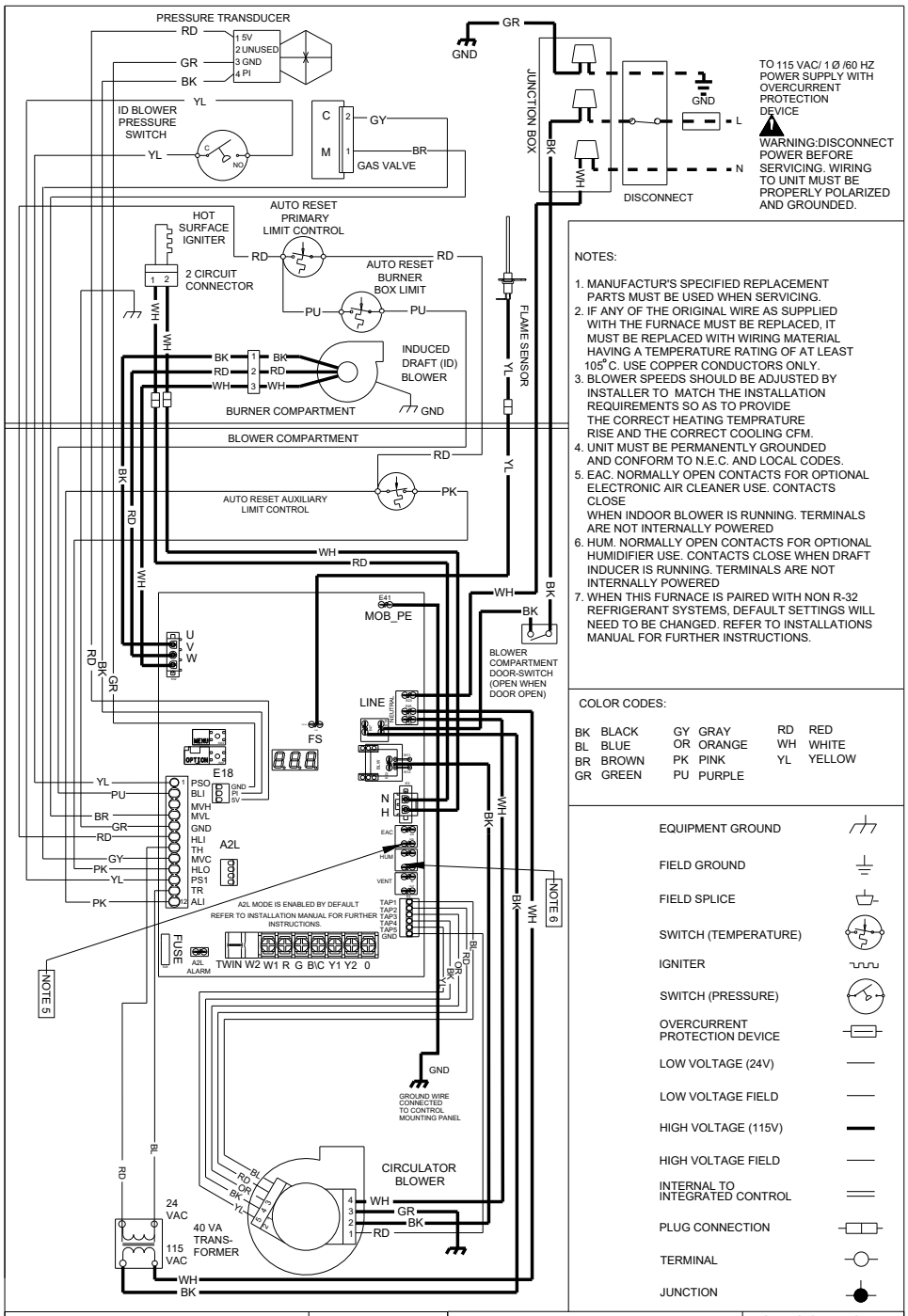

NOTES:

1. MANUFACTUR'S SPECIFIED REPLACEMENT PARTS MUST BE USED WHEN SERVICING.
2. IF ANY OF THE ORIGINAL WIRE AS SUPPLIED WITH THE FURNACE MUST BE REPLACED, IT MUST BE REPLACED WITH WIRING MATERIAL HAVING A TEMPERATURE RATING OF AT LEAST 105°C. USE COPPER CONDUCTORS ONLY.
3. BLOWER SPEEDS SHOULD BE ADJUSTED BY INSTALLER TO MATCH THE INSTALLATION REQUIREMENTS SO AS TO PROVIDE THE CORRECT HEATING TEMPRATURE RISE AND THE CORRECT COOLING CFM.
4. UNIT MUST BE PERMANENTLY GROUNDED AND CONFORM TO N.E.C. AND LOCAL CODES.
5. EAC. NORMALLY OPEN CONTACTS FOR OPTIONAL ELECTRONIC AIR CLEANER USE. CONTACTS CLOSE WHEN INDOOR BLOWER IS RUNNING. TERMINALS ARE NOT INTERNALLY POWERED
6. HUM. NORMALLY OPEN CONTACTS FOR OPTIONAL HUMIDIFIER USE. CONTACTS CLOSE WHEN DRAFT INDUCER IS RUNNING. TERMINALS ARE NOT INTERNALLY POWERED
7. WHEN THIS FURNACE IS PAIRED WITH NON R-32 REFRIGERANT SYSTEMS, DEFAULT SETTINGS WILL NEED TO BE CHANGED. REFER TO INSTALLATIONS MANUAL FOR FURTHER INSTRUCTIONS.

COLOR CODES:

BK	BLACK	GY	GRAY	RD	RED
BL	BLUE	OR	ORANGE	WH	WHITE
BR	BROWN	PK	PINK	YL	YELLOW
GR	GREEN	PU	PURPLE		

EQUIPMENT GROUND
FIELD GROUND
FIELD SPLICE
SWITCH (TEMPERATURE)
IGNITER
SWITCH (PRESSURE)
OVERCURRENT PROTECTION DEVICE
LOW VOLTAGE (24V)
LOW VOLTAGE FIELD
HIGH VOLTAGE (115V)
HIGH VOLTAGE FIELD
INTERNAL TO INTEGRATED CONTROL
PLUG CONNECTION
TERMINAL
JUNCTION

STATUS & FAULT (SEE INSTALLATION MANUAL FOR COMPLETE LIST OF FAULTS)	SEVEN SEGMENT DISPLAY		
	Seg. 1	Seg. 2	Seg. 3
IDLE	I	d	L
CONTINIOUS FAN	F	A	n
LOW STAGE COOLING	1	A	C
HIGH STAGE COOLING	2	A	C
GAS HEAT		g	H
HEAT PUMP HEAT, LOW STAGE	1	H	P
HEAT PUMP HEAT, HIGH STAGE	2	H	P
DEFROST	d	F	t
LOCKOUT DUE TO EXCESSIVE RETRIES RECYCLE	E	E	0
PRESSURE SWITCH CLOSED WHEN ECPECTED TO BE OPEN	E	E	1
PRESSURE SWITCH OPEN WHEN EXPECTED TO BE CLOSED	E	E	2
OPEN HIGH LIMIT SWITCH	E	E	3
FLAME DETECTED WHEN NO FLAME SHOULD BE PRESENT	E	E	4
OPEN FUSE	E	E	5
LOW FLAME SIGNAL	E	E	6
IGNITOR FAULT OR IGNITOR RELAY FAULT	E	E	7
REVERSED LINE POLARITY	E	E	A
GROUNDING ERROR	E	1	0
INTERNAL GAS VALVE ERROR	E	E	b
EXTERNAL GAS VALVE ERROR	E	E	C

STATUS & FAULT (SEE INSTALLATION MANUAL FOR COMPLETE LIST OF FAULTS)	SEVEN SEGMENT DISPLAY		
	Seg. 1	Seg. 2	Seg. 3
AUXILLIARY LIMIT SWITCH OPEN	E	E	d
BURNER LIMIT SWITCH OPEN	E	1	I
LOW CIRCULATOR CURRENT	E	b	L
CIRCULATOR CURRENT UNEXPECTED	E	b	U
A2L COMMUNICATION ALARM	E	A	F
A2L LEAKAGE ALARM	E	A	L
A2L INTERNAL ALARM	E	A	S
A2L RELAY ALARM	E	A	r

0140F20034-A

Wiring is subject to change. Always refer to the wiring diagram on the unit for the most up-to-date wiring.

START-UP CHECKLIST

Furnace				
	Model Number	_____		
	Serial Number	_____		
ELECTRICAL				
Line Voltage (Measure **L1 to N** and **N to Ground** Voltage)	L - N	_____		
	N - G	_____		
Secondary Voltage (Measure Transformer Output Voltage)	R - C	_____		
Blower Amps		_____		
BLOWER EXTERNAL STATIC PRESSURE				
Return Air Static Pressure		_____	IN. W.C.	
Supply Air Static Pressure		_____	IN. W.C.	
Total External Static Pressure (Ignoring +/- from the reading above, add total here)		_____	IN. W.C.	
TEMPERATURES				
Return Air Temperature (Dry bulb / Wet bulb)		_____	DB °F	_____ WB °F
Cooling Supply Air Temperature (Dry bulb / Wet bulb)		_____	DB °F	_____ WB °F
Heating Supply Air Temperature		_____	DB °F	
Temperature Rise		_____	DB °F	
Delta T (Difference between Supply and Return Temperatures)		_____	DB °F	
GAS PRESSURES				
Gas Inlet Pressure		_____	IN. W.C.	
Gas Manifold Pressure (Low Fire)		_____	IN. W.C.	
Gas Manifold Pressure (High Fire)		_____	IN. W.C.	
Gas Type (NG) = Natural Gas / (LP) = Liquid Propane		_____		
Additional Checks				
Check wire routings for any rubbing		_____		
Check for kinked pressure switch tubing.		_____		
Check flue elbow for alignment and clamp tightness.		_____		
Check screw tightness on blower wheel.		_____		
Check factory wiring and wire connections.		_____		
Check product for proper clearances as noted by installation instructions		_____		
Check R-32 sensor wire is connected properly (if applicable)		_____		
°F to °C formula: (°F - 32) divided by 1.8 = °C	**°C to °F formula: (°C multiplied by 1.8) + 32 = °F**			

THIS PAGE IS LEFT INTENTIONALLY BLANK.

CUSTOMER FEEDBACK
We are very interested in all product comments.
Please fill out the feedback form on one of the following links:
Goodman® Brand Products: (http://www.goodmanmfg.com/about/contact-us).
Amana® Brand Products: (http://www.amana-hac.com/about-us/contact-us).
You can also scan the QR code on the right for the product brand you purchased to be directed to the feedback page.

GOODMAN® BRAND

AMANA® BRAND

19001 Kermier Rd., Waller, TX 77484
www.goodmanmfg.com • www.amana-hac.com
© 2026 Daikin Comfort Technologies Manufacturing, Inc.
AMANA® HEATING & AIR CONDITIONING ® / TM 2026 Amana. Manufactured under license by Daikin. Limited warranty provided by the manufacturer. All trademarks are the property of their respective owners.